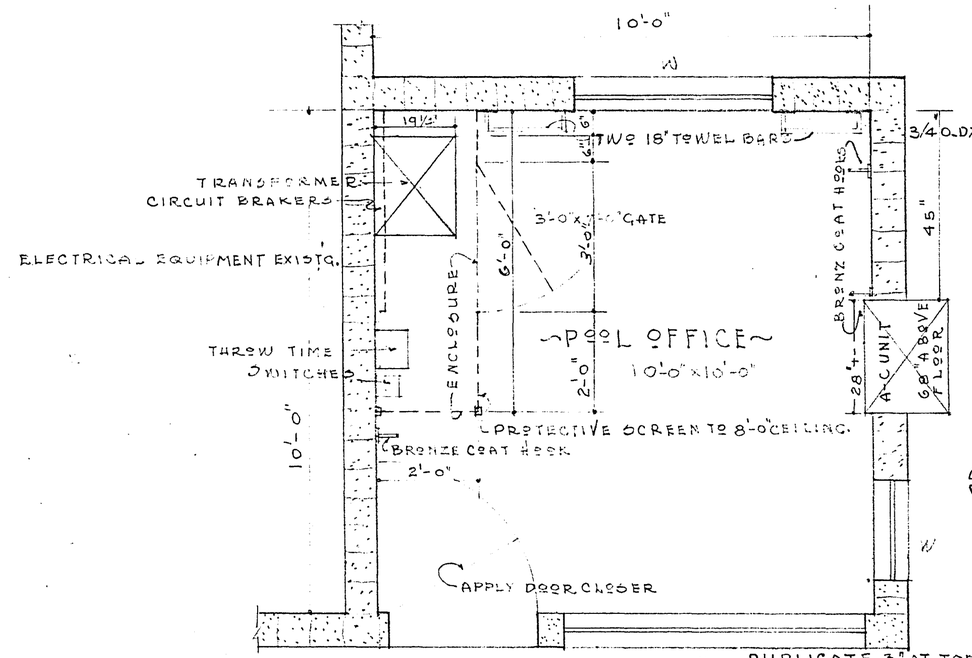

FLOOR PLAN POOL OFFICE

SCALE ½"=1'-0"

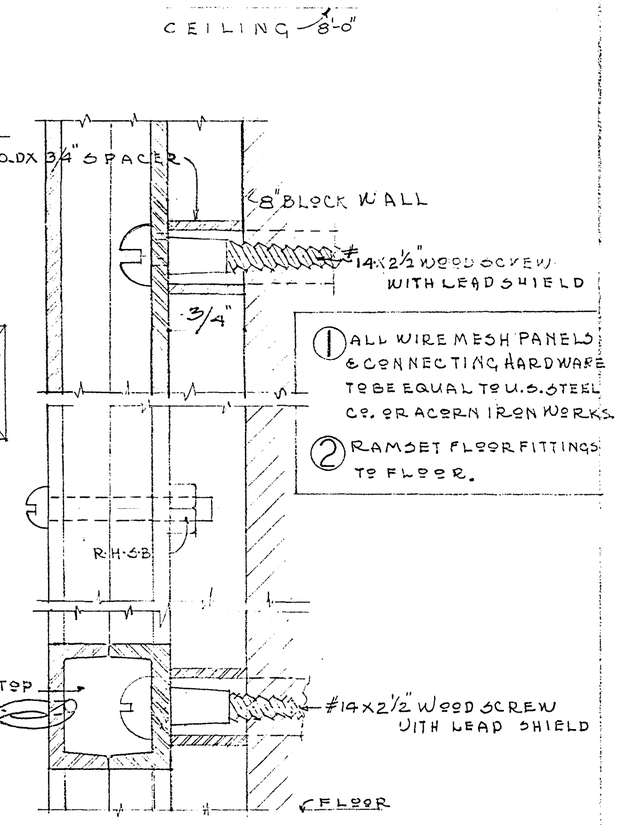

SECTION (H)

SCALE FULL SIZE

1. ALL WIRE MESH PANELS & CONNECTING HARDWARE TO BE EQUAL TO U.S. STEEL CO. OR ACORN IRON WORKS.
2. RAMSET FLOOR FITTINGS TO FLOOR.

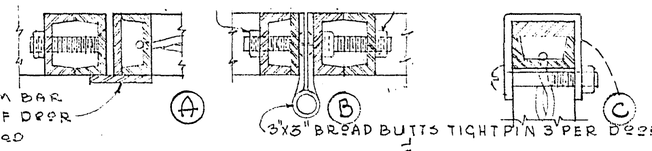

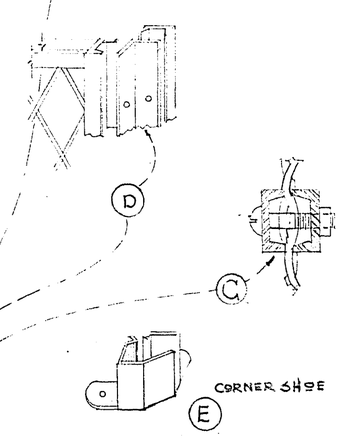

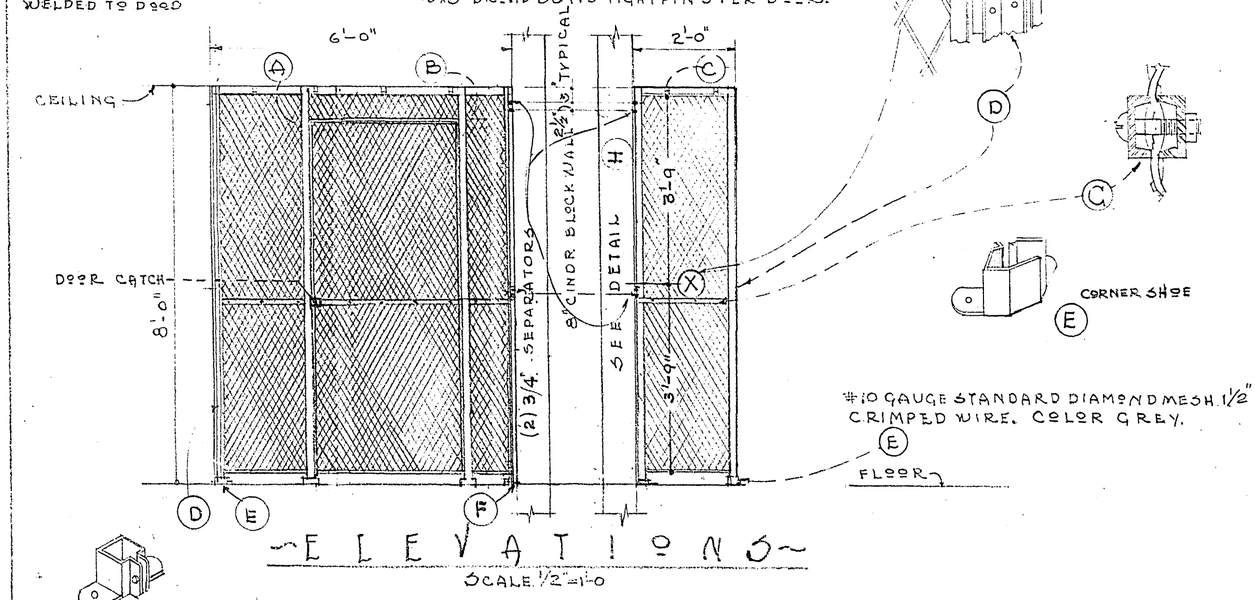

ELEVATIONS

SCALE ½"=1'-0"

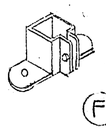

APPROVED DATE 3/17/70

BY [signature]

MAINTENANCE DEPT

WORK INVOLVED

1.	BUILD SCREEN AROUND EL. UNITS
2.	INSTALL (2) 18" TOWEL BARS.
3.	INSTALL (3) BRONZE COAT HOOKS.
4.	FURNISH & INSTALL DOOR CLOSER

PROPOSED SCREEN AROUND ELECTRICAL UNITS IN POOL OFFICE.

CITY OF LAS VEGAS
DEPARTMENT OF PUBLIC WORKS
SERVICES DIVISION.

SWIMMING POOL FILTER BLDG. FOR
GARSIDE SCHOOL
400 TOREY PINES DRIVE, LAS VEGAS, NEV.

W.O. NO 3000		DATE	
		7-14-69	
DES. HARRY H. WHITELEY			
DRAWN " " " A.I.A			
APPROVED BY [signature]		12/17/69	SHEET NO A-16-2

DWG. NO. 674-14B
SHEET 1 OF 1

674-13-411