PLANNING & DEVELOPMENT DEPARTMENT

STATEMENT OF FINANCIAL INTEREST

Case Number: RQR-34324 APN: 139-27-401-031

Name of Property Owner: City Parkway IV A, Inc.

Name of Applicant: CBS Outdoor

Name of Representative: Ryan Arnold

To the best of your knowledge, does the Mayor or any member of the City Council or Planning Commission have any financial interest in this or any other property with the property owner, applicant, the property owner or applicant's general or limited partners, or an officer of their corporation or limited liability company?

☐ **Yes** ☒ **No**

If yes, please indicate the member of the City Council or Planning Commission who is involved and list the name(s) of the person or persons with whom the City Official holds an interest. Also list the Assessor's Parcel Number if the property in which the interest is held is different from the case parcel.

City Official: _____

Partner(s): _____ _____

APN: _____

Signature of Property Owner: Elizabeth N. Fretwell

Print Name: Elizabeth N. Fretwell

Subscribed and sworn before me

This 7 day of May, 20 09

Kim A. Barrera

Notary Public in and for said County and State

KIM A. BARRERA
Notary Public State of Nevada
No. 99-50021-1
My appt. exp. Nov. 25, 2010

RECEIVED
MAY 12 2009

Exhibit A

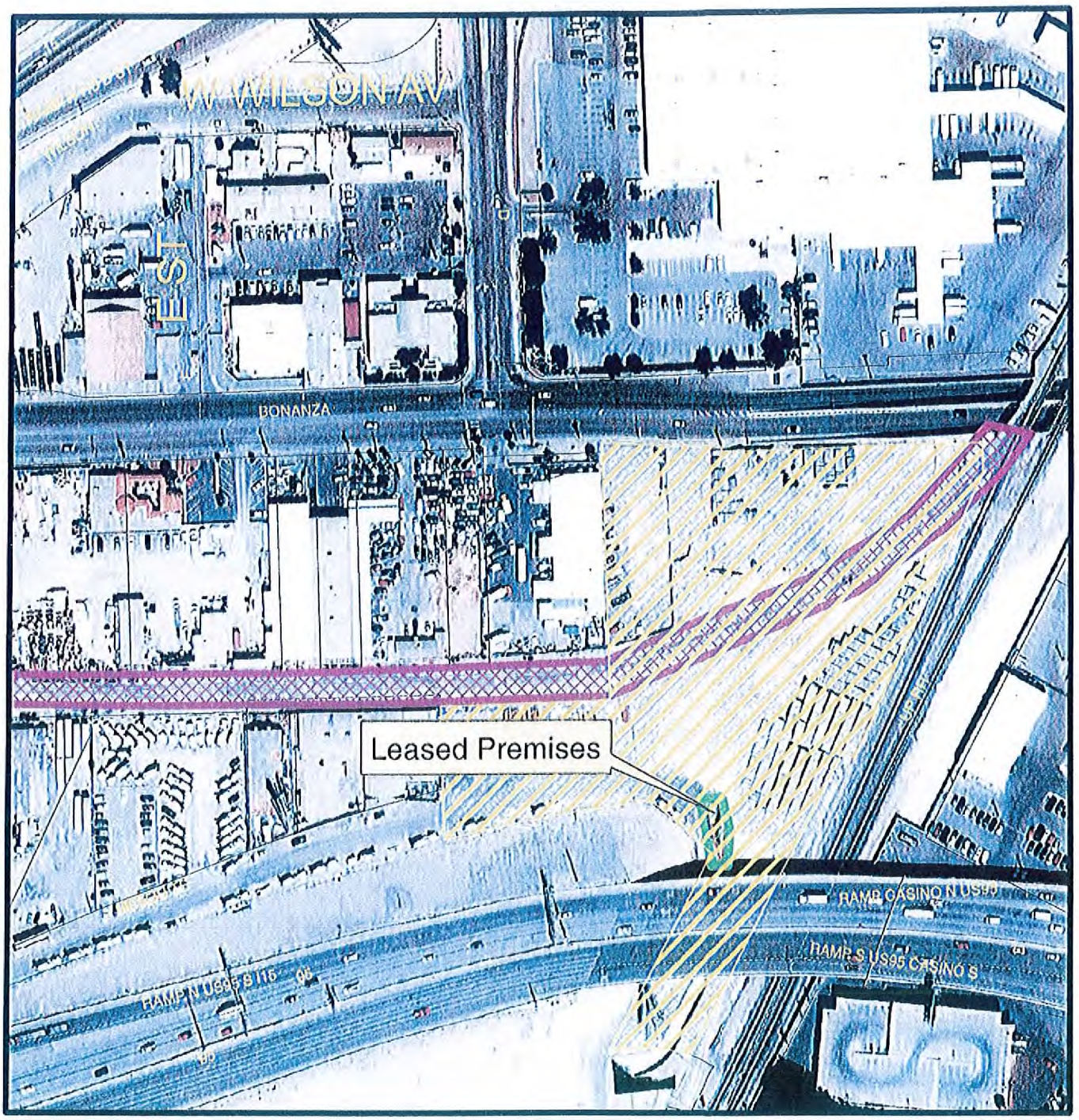

Legend

City Parkway IV - A

UP Rail Spur

Billboard Site

APN: 139-27-401-031

0 105 210 420 Feet

May 28, 2008

RECEIVED
MAY 12 2009

N
W E
S

RQR-34324

06/11/09 PC

SIGN ELEVATION

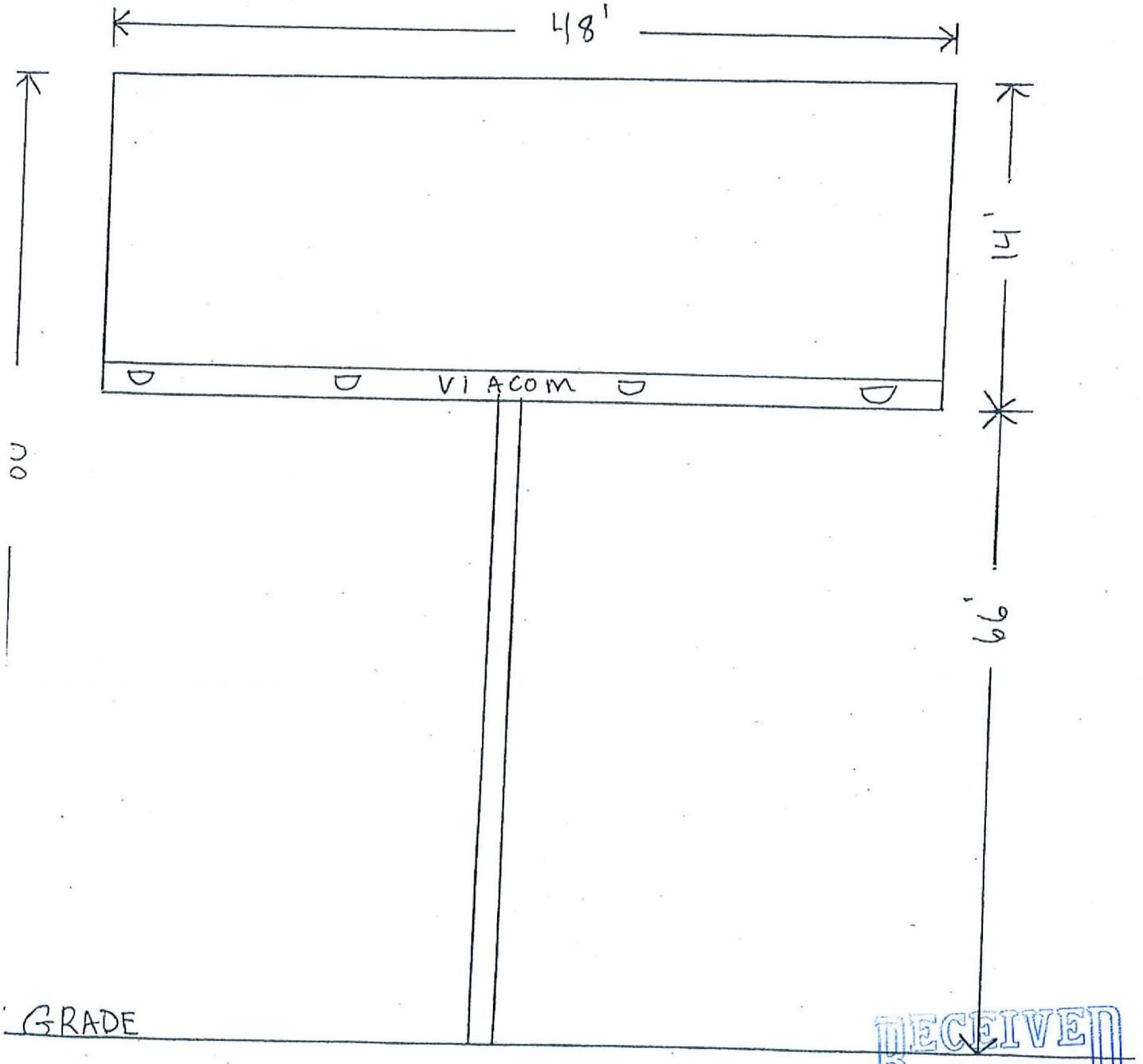

RECEIVED
MAY 12 2009

RQR-34324
06/11/09 PC

L-3626-01
JB

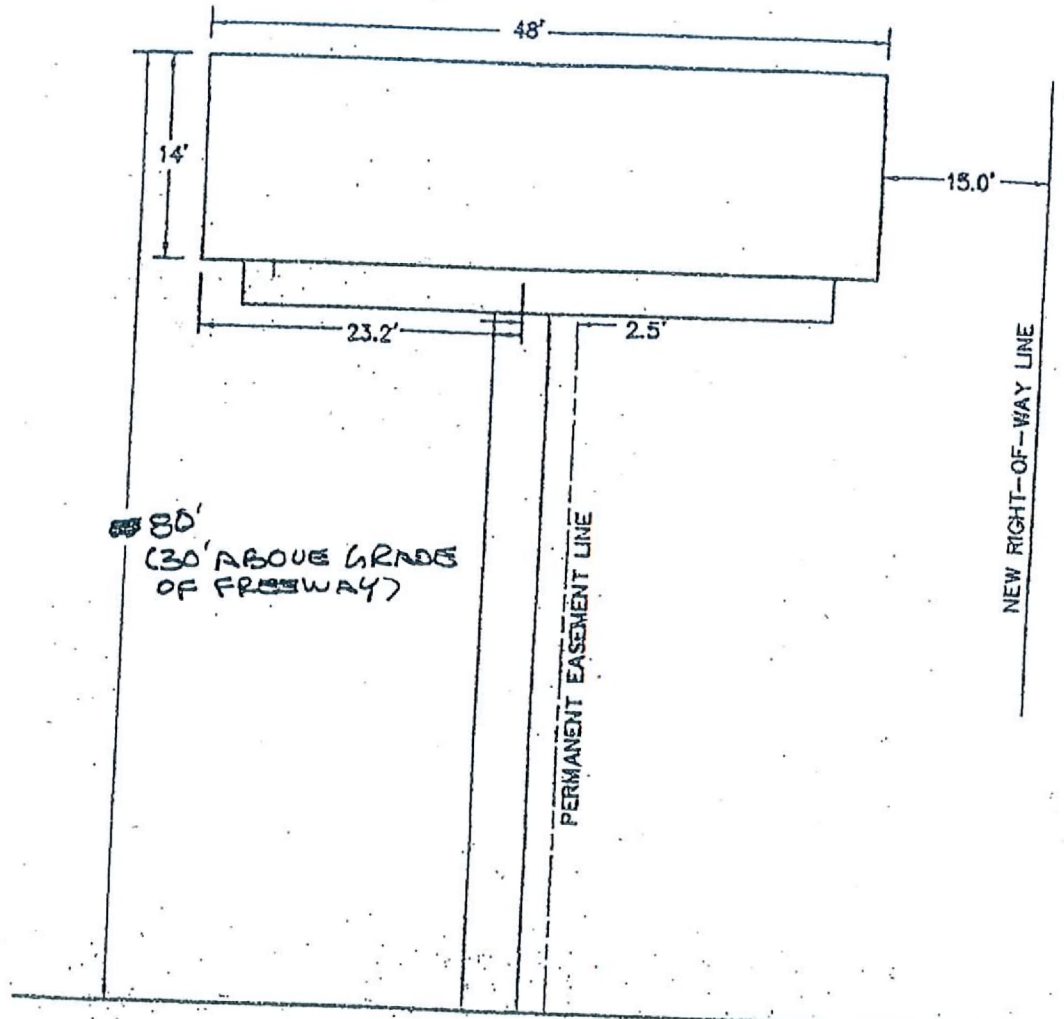

DETAIL "C" NO SCALE

RECEIVED
MAY 12 2009

RQR-34324
06/11/09 PC

LAS VEGAS - Freeways #1000

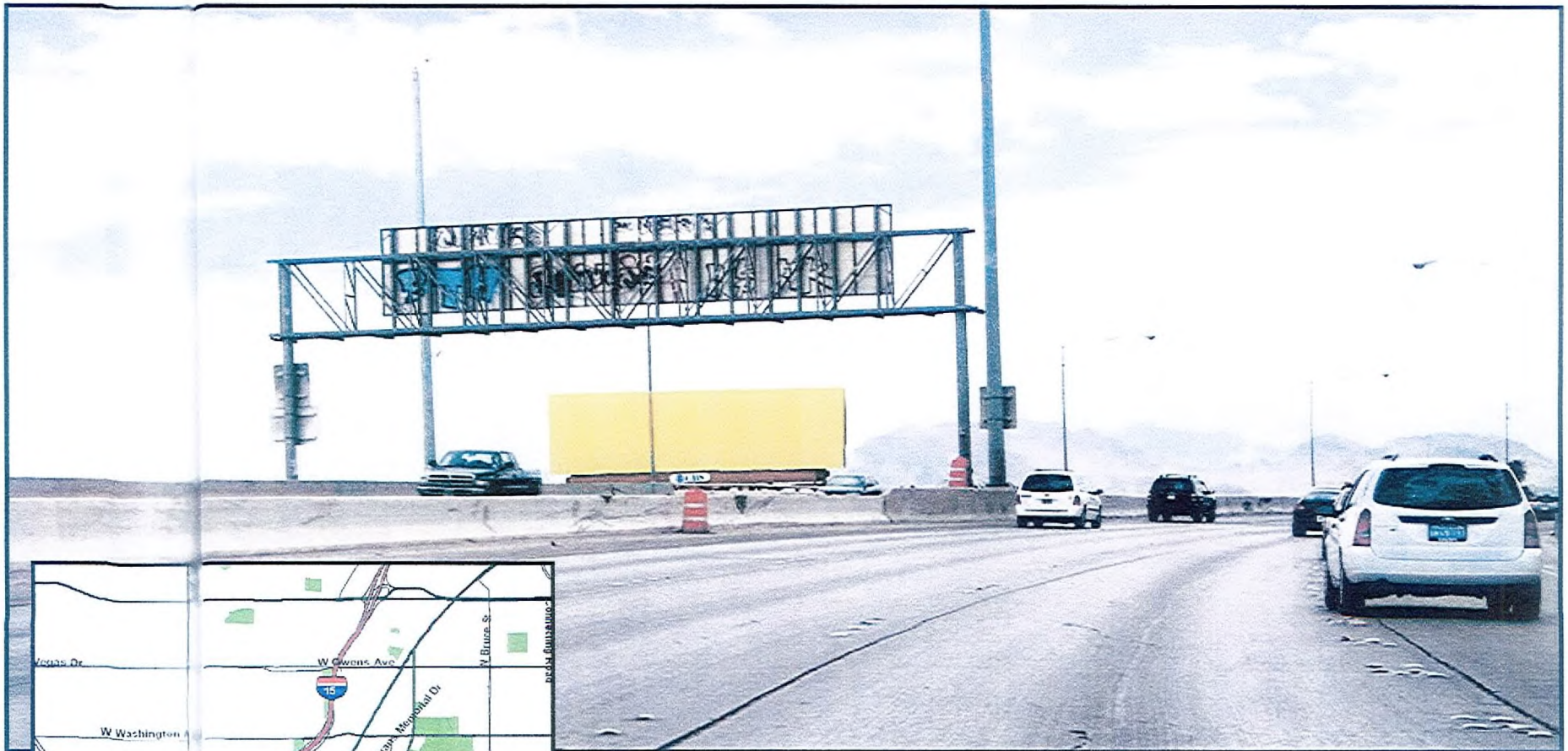

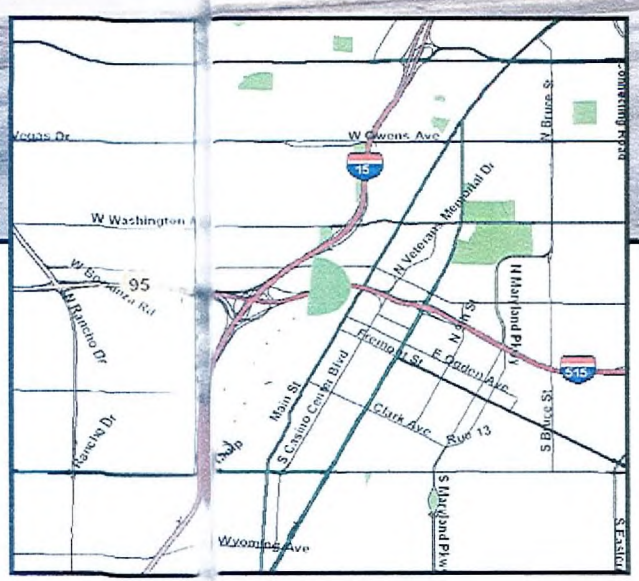

Hwy 95 W/O Main N/S / Facing W - DEC: 139,140

Rev. 2008

RQR-34324
06/11/09 PC

RECEIVED
MAY 12 2009

CBS OUTDOOR
6655 W. Sahara Ave. #D110
Las Vegas, NV 89146
702.795.3325
www.cbsoutdoor.com