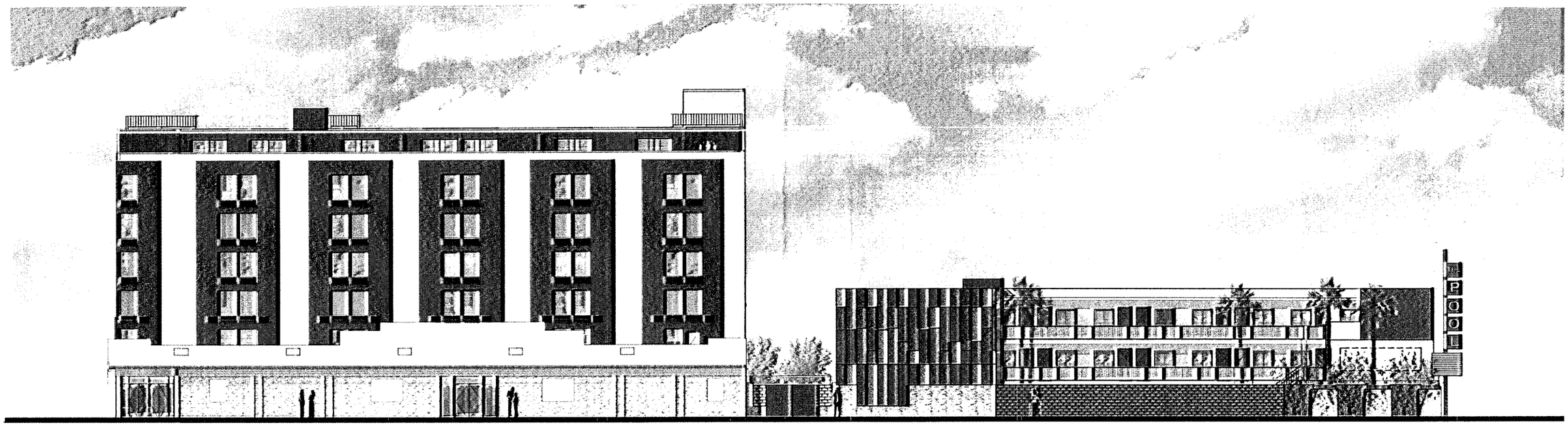

B1 SOUTH ELEVATION

3/32" = 1'-0"

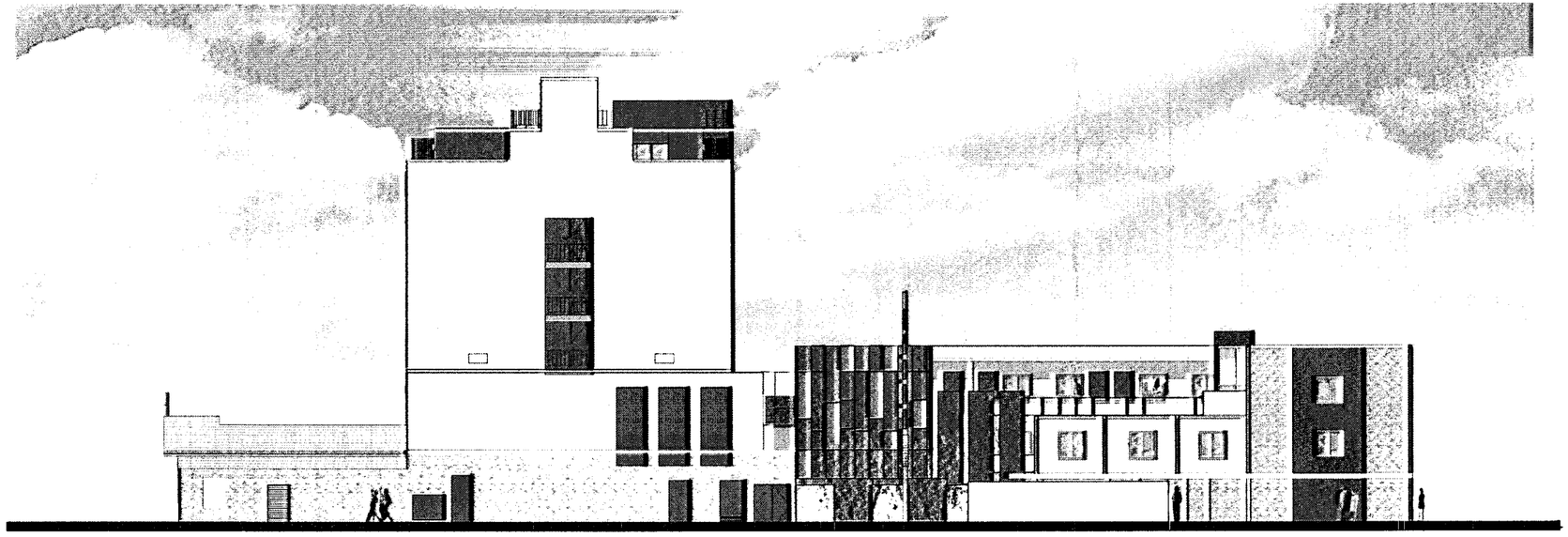

D1 EAST ELEVATION

3/32" = 1'-0"

APPROVED
Color Revision Only
BY John Anderson 4/25/09
CURRENT PLANNING DIVISION
CITY OF LAS VEGAS

Copyright 2008 © by APTUS Architecture

APTUS Architecture
1200 South 4th Street
Suite 206
Las Vegas, Nevada 89104
P 702.839.1200
F 702.839.1213

Gold Spike
Site Development Review
Ogden Avenue between 4th Street and Las Vegas Boulevard
Las Vegas, Nevada 89101

RECEIVED
APR 28 2009

BUILDING ELEVATIONS

A200

07-170 Gold Spike

CLV 198062

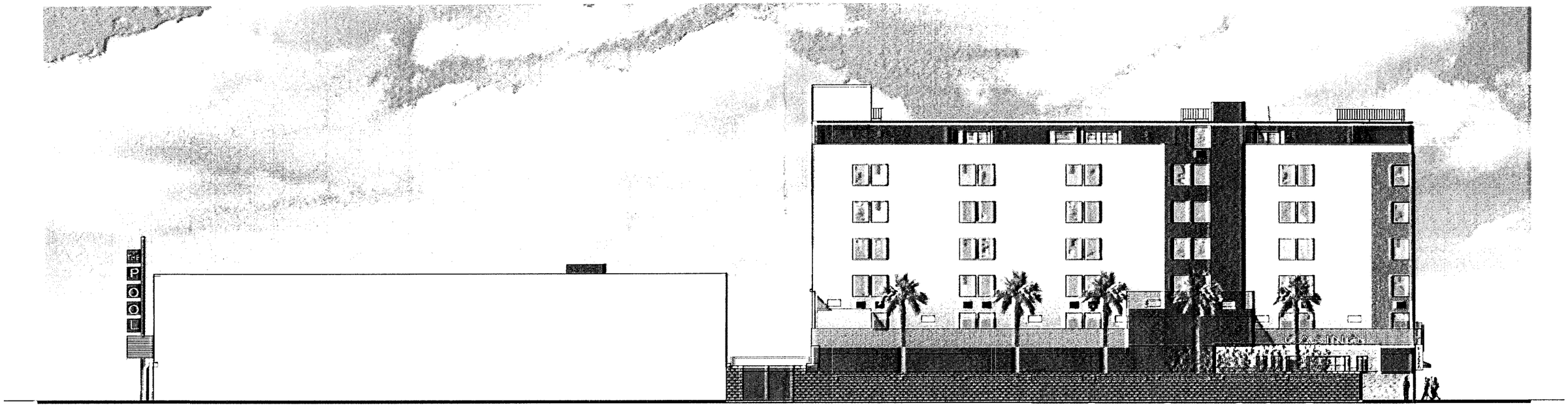

C1 NORTH ELEVATION

3/32" = 1'-0"

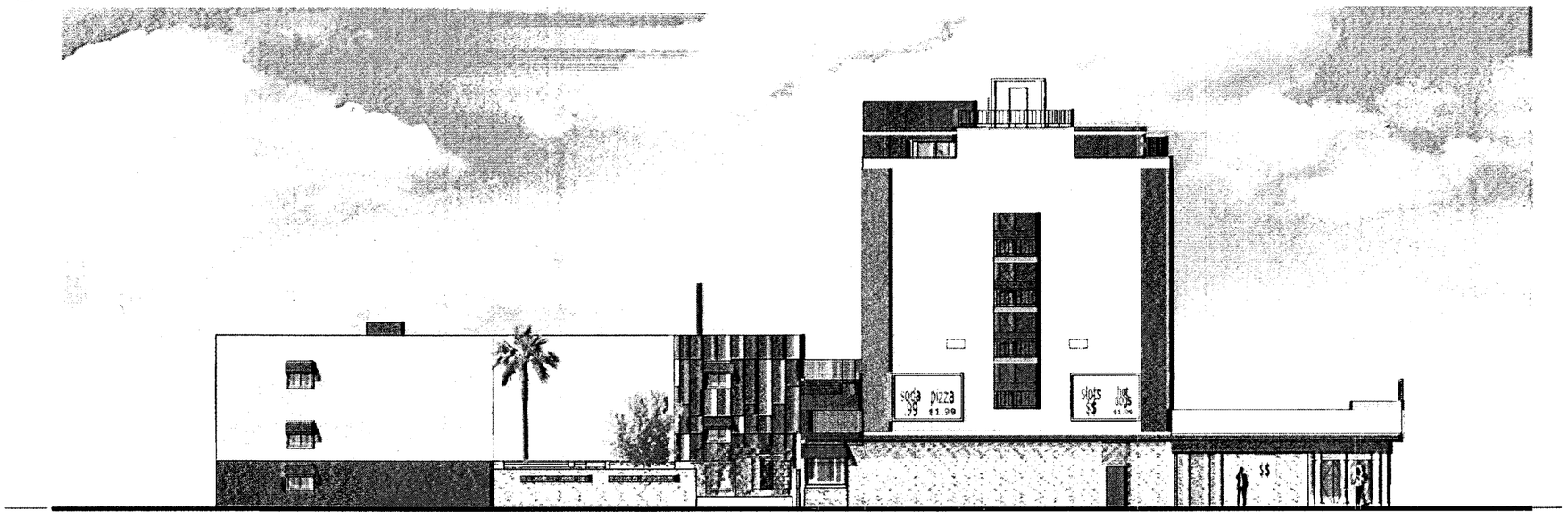

D1 WEST ELEVATION

3/32" = 1'-0"

APPROVED,
Color Revision Only
BY Flm Ruder 4/28/09
CURRENT PLANNING DIVISION
CITY OF LAS VEGAS

Gold Spike

Site Development Review

Ogden Avenue between 4th Street and Las Vegas Boulevard
Las Vegas, Nevada 89101

RECEIVED
APR 28 2009

BUILDING ELEVATIONS

A201

07.170 Gold Spike

CLV 138062

Copyright 2008 © by APTUS Architecture

APTUS Architecture
1200 South 4th Street
Suite 206
Las Vegas, Nevada 89104
P 702.819.1200
F 702.819.1213

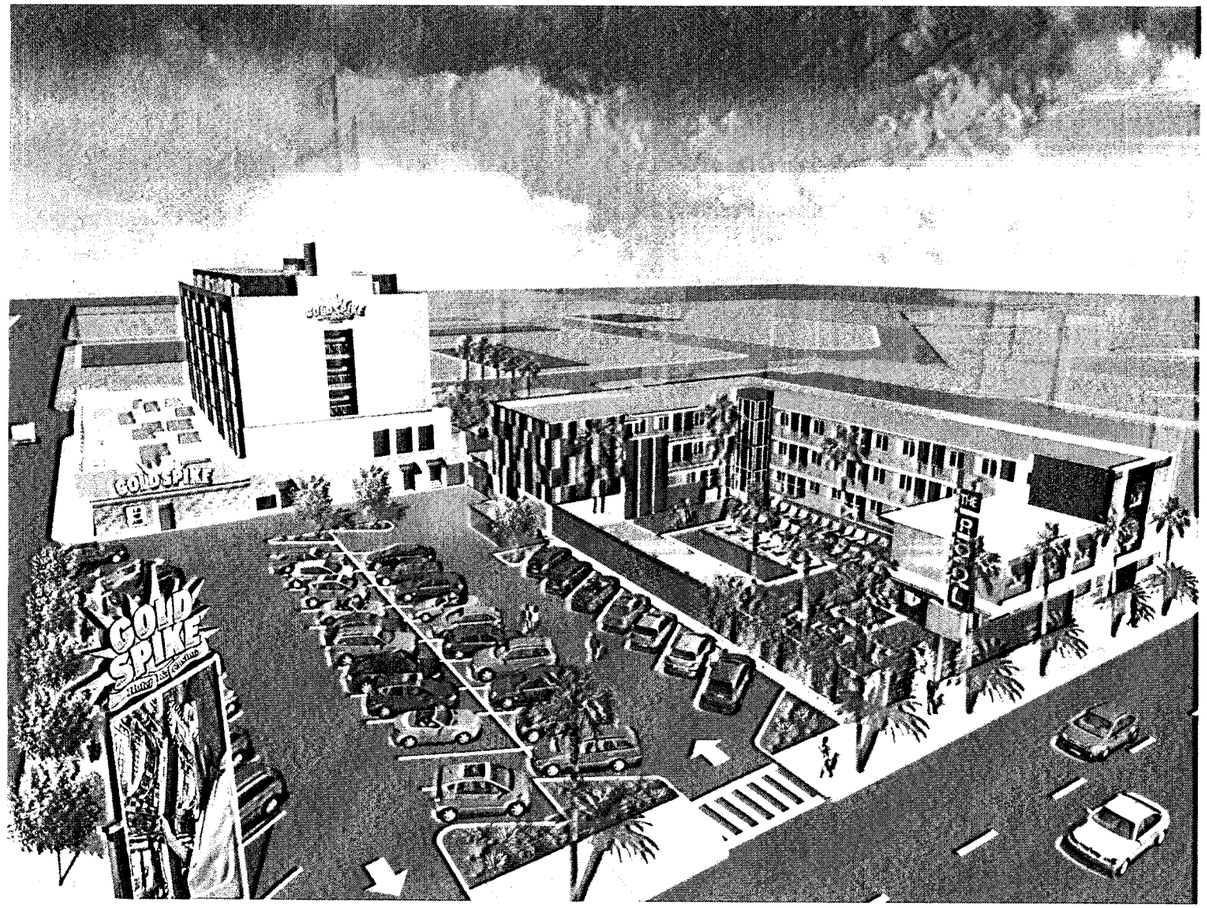

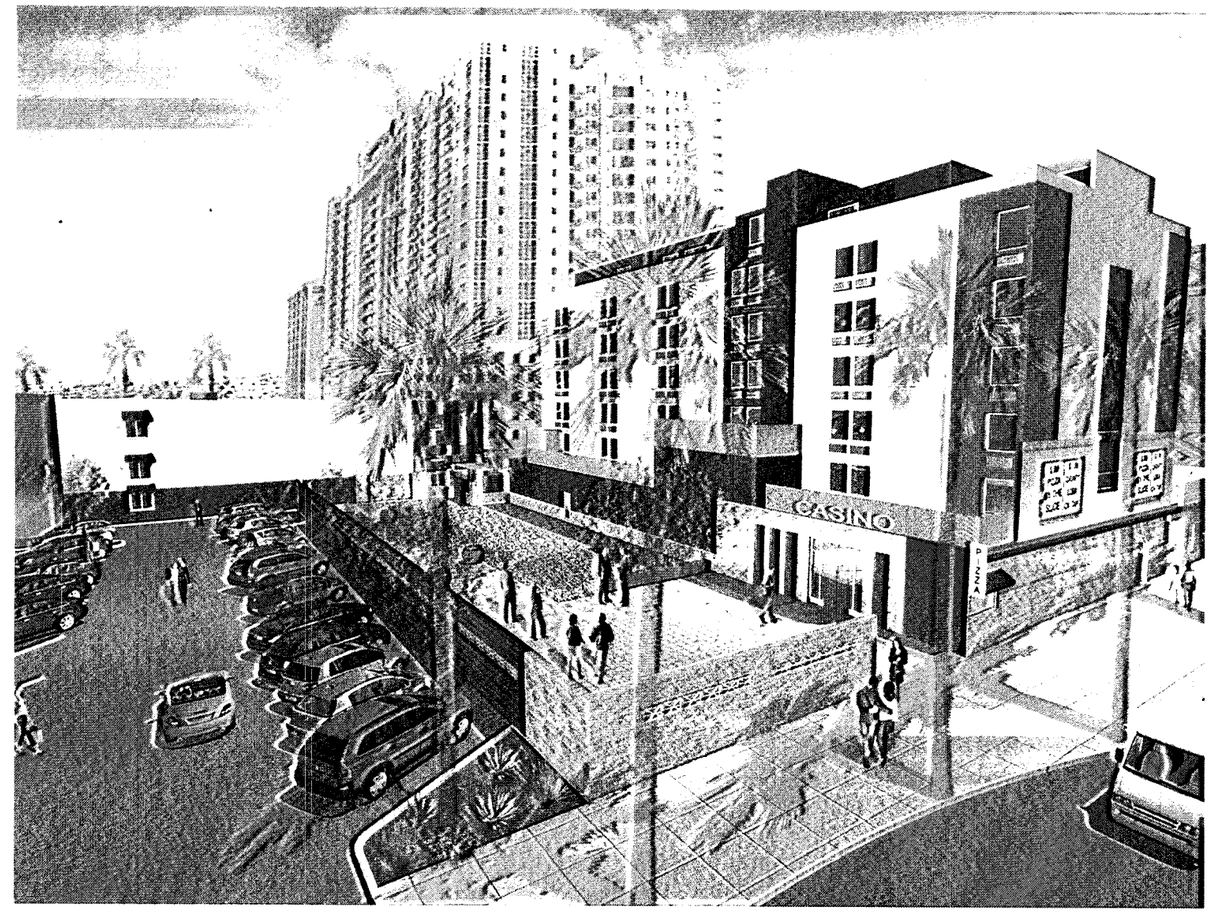

APPROVED
Color Revision Only
BY [signature] 4/28/09
CURRENT PLANNING DIVISION
CITY OF LAS VEGAS

RECEIVED
City of Las Vegas SDR Submittal
APR 28 2009

Copyright 2008 © by APTUS Architecture

APTUS Architecture
1200 South 4th Street
Suite 206
Las Vegas, Nevada 89104
P 702.839.1200
F 702.839.1213

Gold Spike
Site Development Review
Ogden Avenue between 4th Street and Las Vegas Boulevard
Las Vegas, Nevada 89101

PERSPECTIVES

A300

07.170 Gold Spike

CLV 138062

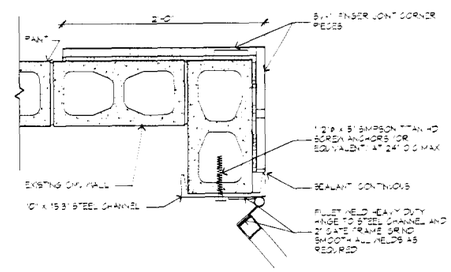

A1 GATE JAMB

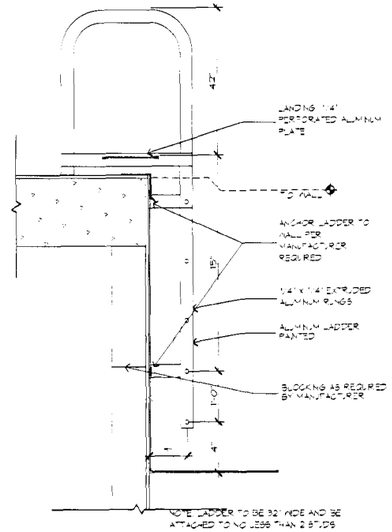

B2 ROOF ACCESS LADDER DETAIL

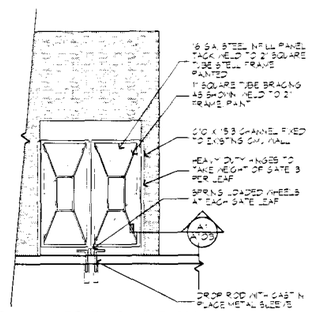

B1 GATE ELEVATION

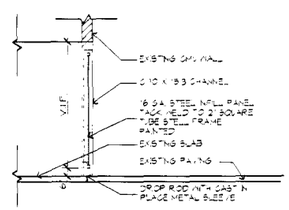

C1 GATE SECTION

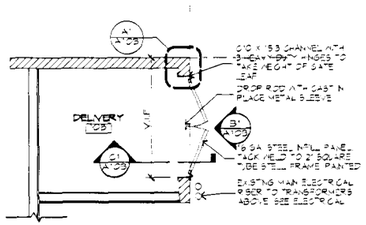

D1 GATE PLAN

PENTHOUSE FLOOR PLAN NOTES

1. REMOVE ALL EXISTING BUILDING AND FIXED WINDOWS AND DOORS
2. REMOVE ALL EXISTING THRU WALL ANCHORS AND SLEEVES. SEE DETAIL D1/A500
3. SEE ELEVATIONS FOR NEW WINDOWS, BUILDING DOOR TYPES AND SHEET A500 FOR DETAILING
4. INFILL WALLS TO CONSIST OF 3 1/2", X 25 GAUGE METAL STUDS, 1 3/8" 3-COAT STUCCO METAL LATH AND BUILDING PAPER TO MATCH ADJACENT EXISTING WALL. 5/8" INTERIOR GYP BD TAPED AND SPACKLED
5. PREPARE NEW WALL OPENING FOR NEW THRU WALL ANCHORS AND SLEEVES. WEATHER SEAL NEW SLEEVES. OWNER TO PROVIDE ANCHOR

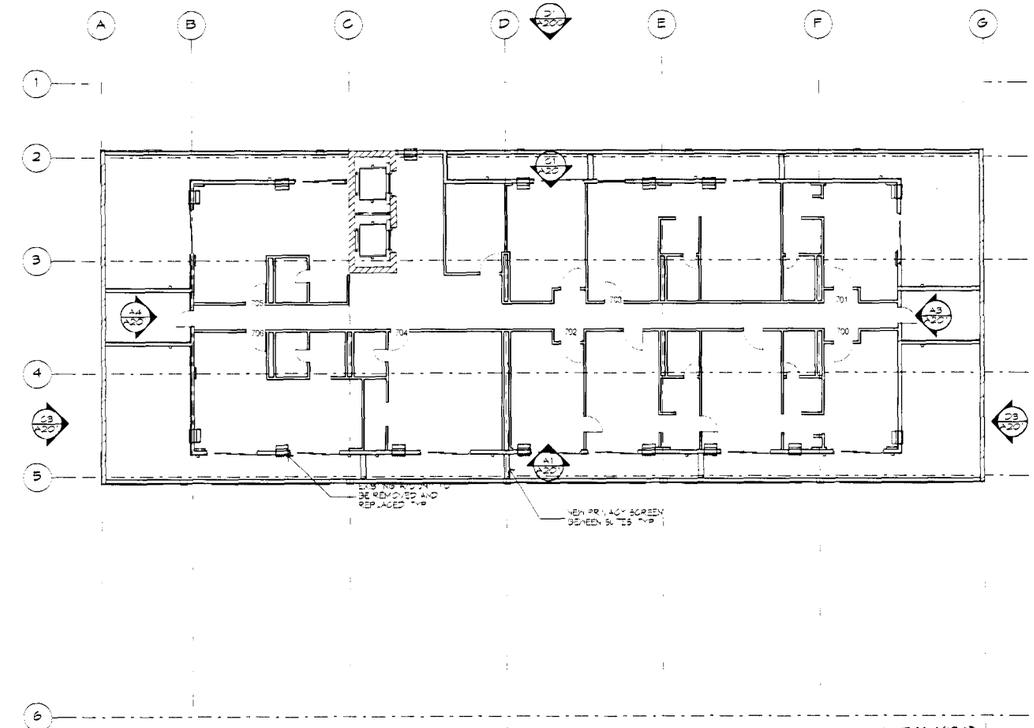

PENTHOUSE

RECEIVED
APR 28 2009

Gold Spike Hotel & Casino
Exterior Upgrades
400 East Ogden Avenue
Las Vegas, Nevada 89101

APTUS Architecture
1200 South 4th Street
Suite 206
Las Vegas, Nevada 89104
P 702.839.1200
F 702.839.1213

APTUS PROJECT NO 07.170

ARCHITECT

ENGINEER

NOTES

COPYRIGHT 2009 © BY APTUS ARCHITECTURE

NO	DESCRIPTION	DATE
	City of Las Vegas Plancheck	02.20.09

ISSUED

TITLE
PENTHOUSE FLOOR PLAN & DETAILS

DRAWING NO
A103
Gold Spike Hotel & Casino

128062

F:\07.170 Gold Spike\DWG\Travel Inn and Gold Spike Exterior\Outlook07\B1\Gold Spike_Exterior_50.dwg, 2/24/2009 11:23 AM, stacey

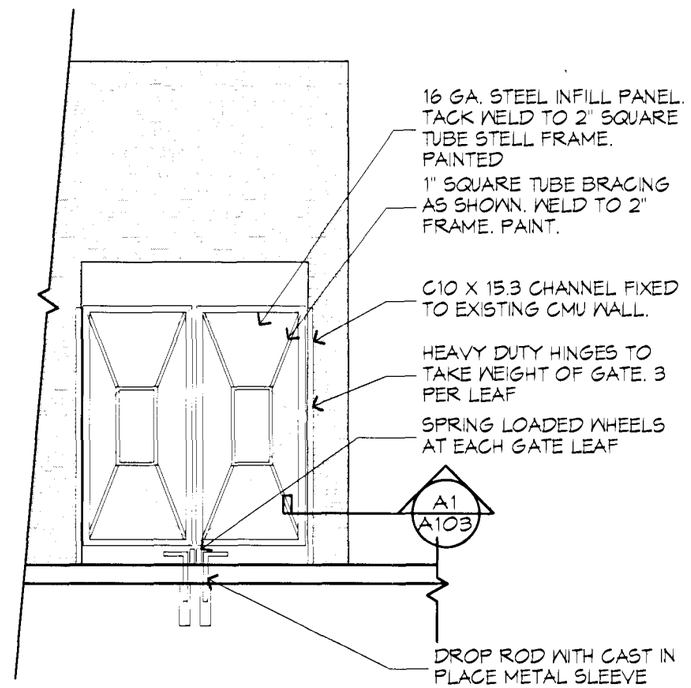

B1 GATE ELEVATION

1/4" = 1'-0"

APPROVED
Door Revision Only
BY [signature] 4/28/09
CURRENT PLANNING DIVISION
CITY OF LAS VEGAS

RECEIVED
APR 28 2009

COLD SPIKE
B1/A103

CW 138062