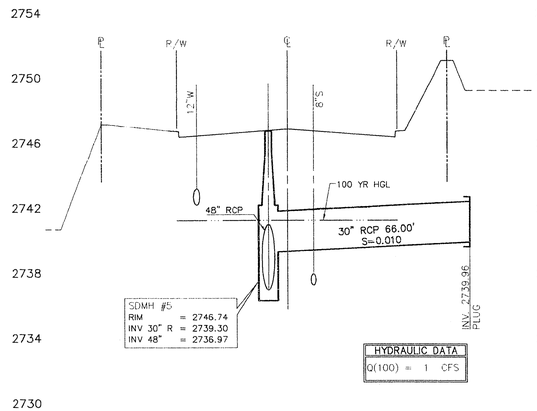

1 STORM DRAIN LATERAL
SEE SHEET ST-1 STA 19+07.00

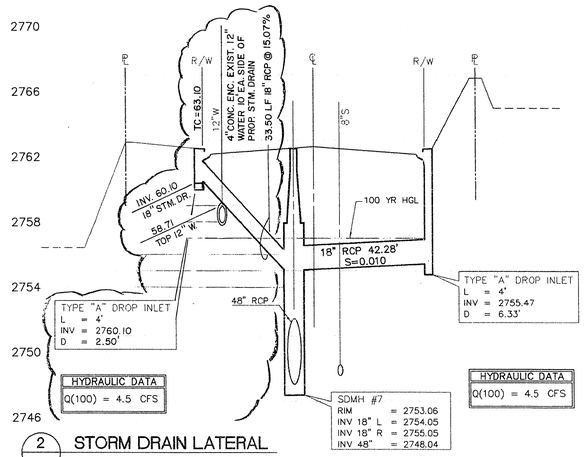

2 STORM DRAIN LATERAL
SEE SHEET ST-2 STA 23+75.00

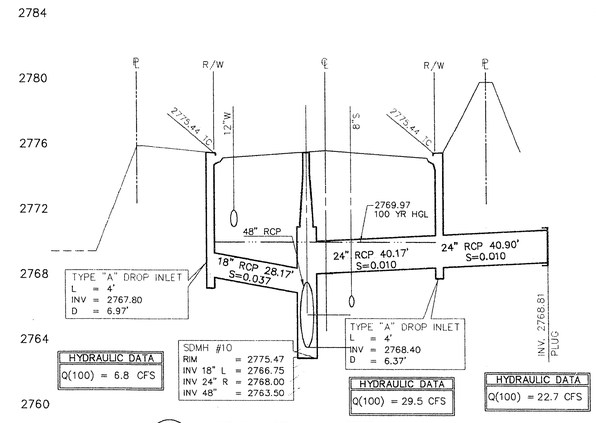

3 STORM DRAIN LATERAL
SEE SHEET ST-3 STA 30+50.0

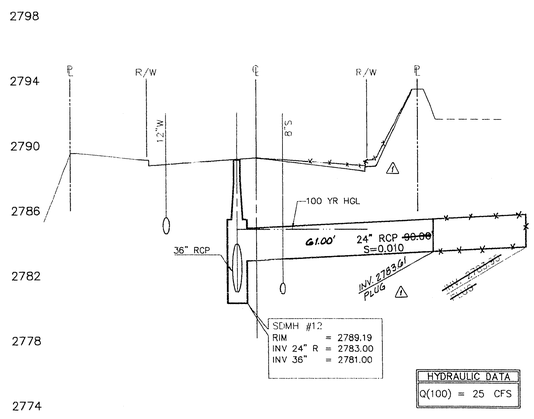

4 STORM DRAIN LATERAL
SEE SHEET ST-5 STA 38+36.00

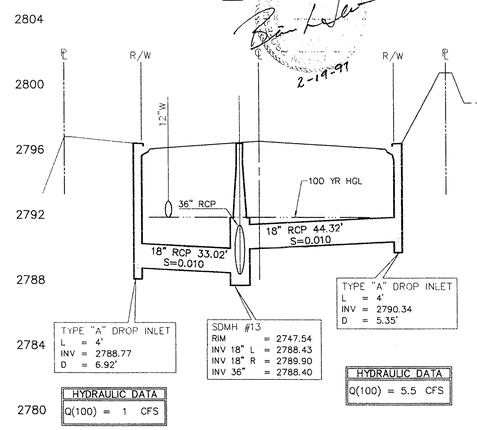

5 STORM DRAIN LATERAL
SEE SHEET ST-5 STA 40+56.00

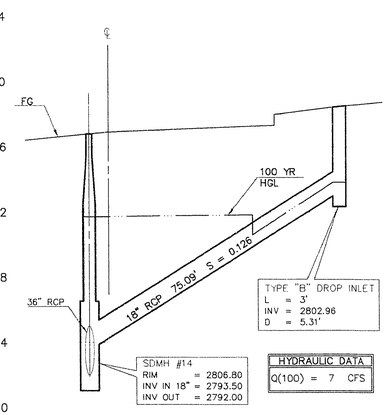

6 STORM DRAIN LATERAL
SEE SHEET ST-6,7 STA 43+65.00

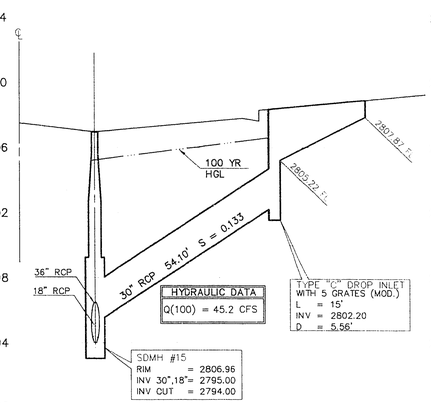

7 STORM DRAIN LATERAL
SEE SHEET ST-6,7 STA 44+45.78

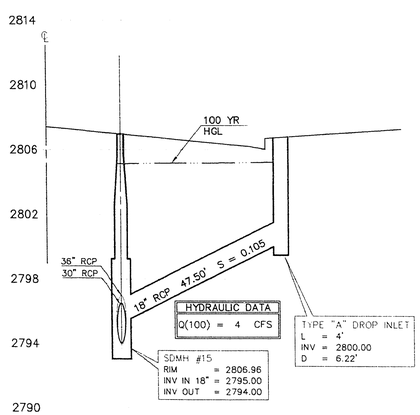

8 STORM DRAIN LATERAL
SEE SHEET ST-6 STA 44+45.78

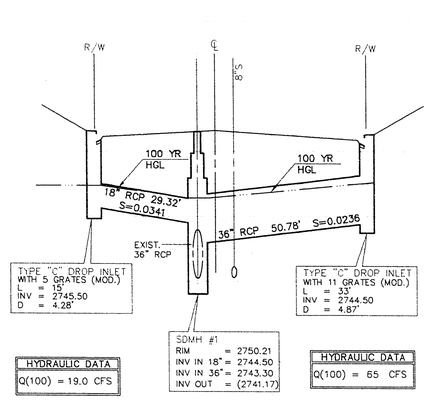

9 STORM DRAIN LATERAL
SEE SHEET ST-11 STA 79+95.48

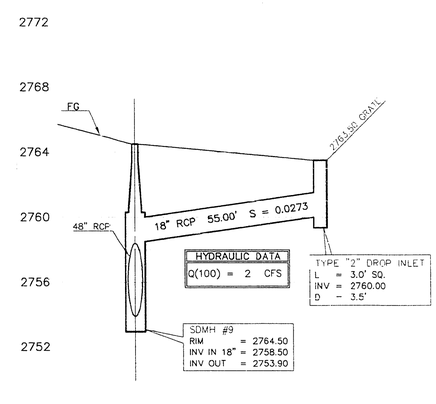

11 STORM DRAIN LATERAL
SEE SHEET GP-2 STA 2+00.00

REV.	DATE	DESCRIPTION	DATE	APPROVAL
A	3/14/97	REVISED STM. DRAIN % SLOPE	3/18/97	
B	2/19/97	REVISED PROFILE 2	2-21-97	
C	3/20/94	RELOCATED 24" S.D.	4/18/94	

RECOMMENDED
GARY RY BUSBY
R.P.E. 10584 DATE 6/15/94

ENGINEER
THE KEITH COMPANIES NEVADA
4002 SO. INDUSTRIAL RD. LAS VEGAS, NV 89103 (702) 733-0350
• PLANNING
• CIVIL ENGINEERING
• LAND SURVEYING
• ARCHITECTURE
• CONSTRUCTION MANAGEMENT

RECORD DRAWING
RECORD INFORMATION PROVIDED BY FIELD CONTRACTOR

HOWARD HUGHES PROPERTIES
SUMMERLIN VILLAGE 7 - THE TRAILS - UNIT 2
STORM DRAIN LATERAL PROFILES

SHEET
ST-13
SHT 23 OF 48

11-2-94

1074-4271-2