160571

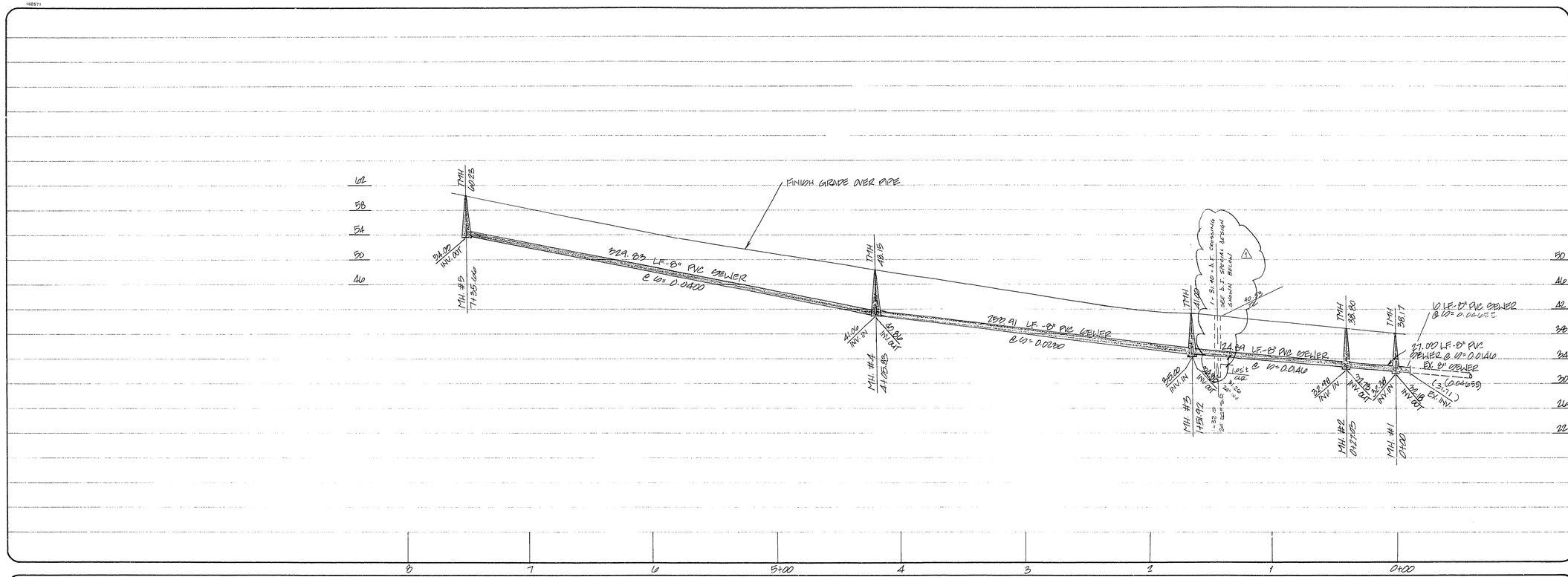

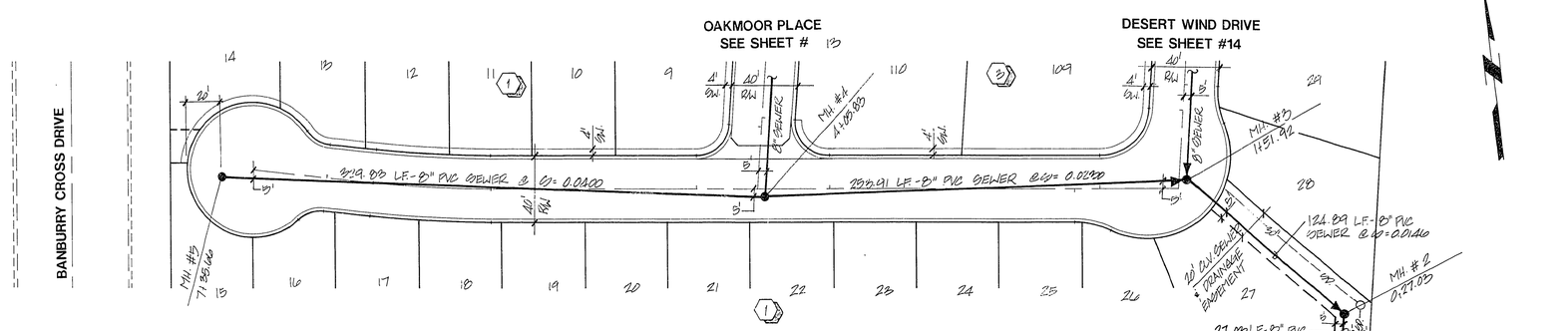

ENDERLY LANE

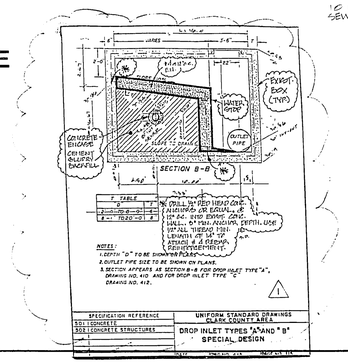

BENCHMARK
2" BRASS CAP #42
CONTROL POINT "SPANKY"
AS PER G.C. WALLACE
ELEV.= 2825.38

2 working days Call before you Dig
1-800-227-2600

KAUFMAN & BROAD OF NEVADA
CITY OF LAS VEGAS

VTN nevada
CONSULTING ENGINEERS • PLANNERS • LAND SURVEYORS
2727 SOUTH RAINBOW BOULEVARD
LAS VEGAS, NEVADA 89102-5148 PHONE (702) 873-7550 FAX (702) 362-2597

REV	DATE	BY	REVISION
1	3-02-95	JCM	ADD 24" SPECIAL DESIGN FOR SEWER CROSSING

TITLE: SEWER PLAN - PROFILE
KENTON LANE

PROJECT: WEST HILLS

SEAL
6-20-94

WO NO. 4652
BY JM/WJR
DATE MAY,'94
SCALE 1"= 40' / 1"= 8'
SHEET 12 OF 17 SHEETS

© 1994 CURRY KASO MESSAKE INC

11-17-3X

307Y-4359