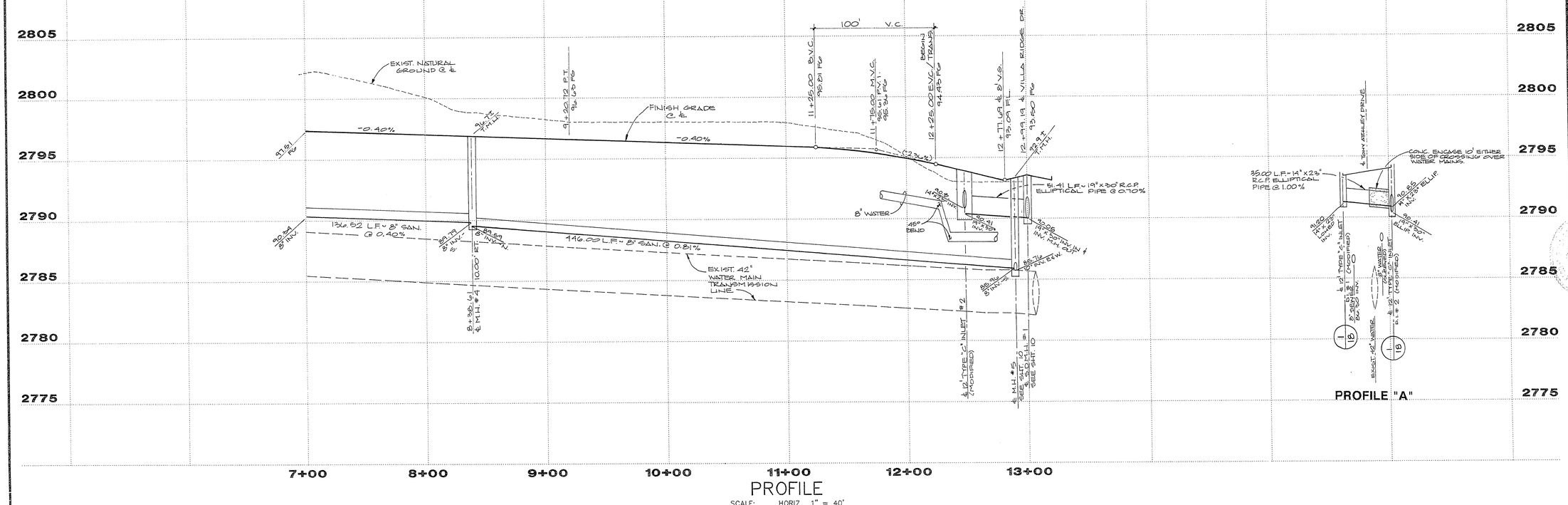

PROFILE "A"

PROFILE

SCALE: HORIZ. 1" = 40'
VERT. 1" = 4'

SD MH COORDINATES

MH#	NORTH	EAST
1	N 534421.827	E 578332.110

SD LINE TABLE

LINE	BEARING	DISTANCE
1	N 89°41'57" W	35.00'
2	S 32°55'59" E	51.41'

CURVE TABLE

	CURVE	DELTA	RADIUS	LENGTH	TANGENT
	1	90°00'00"	20.00'	31.42'	20.00'
	2	01°34'03"	1475.00'	40.35'	20.18'
	3	03°10'00"	1475.00'	81.52'	40.77'
	4	00°33'30"	1475.00'	14.37'	7.19'
	5	00°51'03"	1515.00'	22.50'	11.25'
	6	02°48'00"	1515.00'	74.04'	37.03'
	7	02°00'30"	1515.00'	53.10'	26.55'
℄	8	00°00'00"	1495.00'	0.00'	0.00'
℄ O.A.	9	16°23'08"	1475.00'	421.82'	212.36'
℄ O.A.	10	16°23'08"	1495.00'	427.54'	215.24'
O.A.	11	16°23'08"	1515.00'	433.26'	218.12'

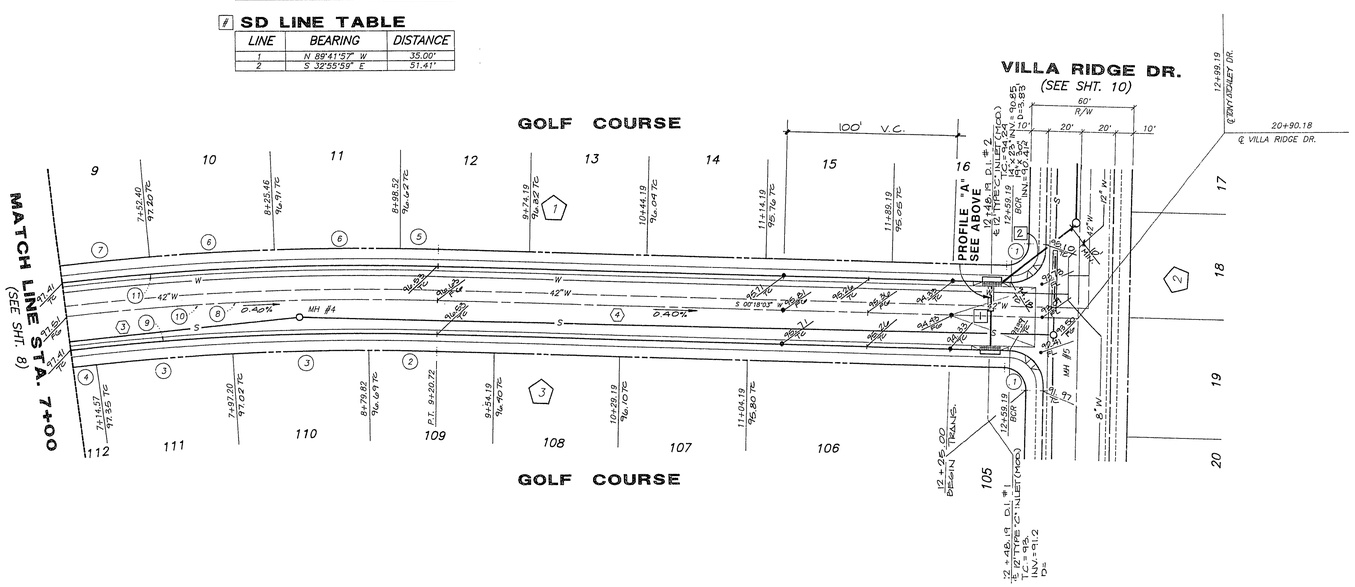

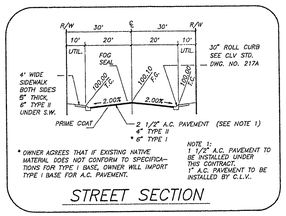

STREET SECTION

MH COORDINATES

MH#	NORTH	EAST
4	N 533963.522	E 578390.120

SEWER LINE TABLE

LINE	BEARING	DISTANCE
3	N 07°32'57" W	243.52'
4	S 00°00'56" W	446.00'

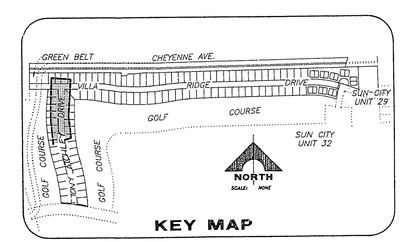

KEY MAP

TONY ATCHLEY DRIVE

JOB NO. 701.164

PLOTTED: 03/11/92 10:35 am DRAWING: d37-9

REV	DATE	DESCRIPTION	C.L.V.	DATE

RECOMMENDED: MICHAEL D. ROSS — P.E. NO. 6218 — DATE

G.C. WALLACE, INC. Engineering/Architecture — 1555 SOUTH RAINBOW BLVD./LAS VEGAS, NEVADA 89102

DEL WEBB COMMUNITIES, INC.
SUN CITY LAS VEGAS UNIT NO. 37

SHEET 9 OF 28 SHEETS

10-9-105

1074-414-37