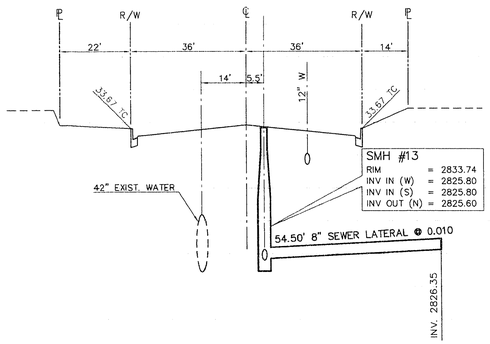

E — SEWER LATERAL

TRAILWOOD DRIVE STA 49+48.35 SEE SW-8

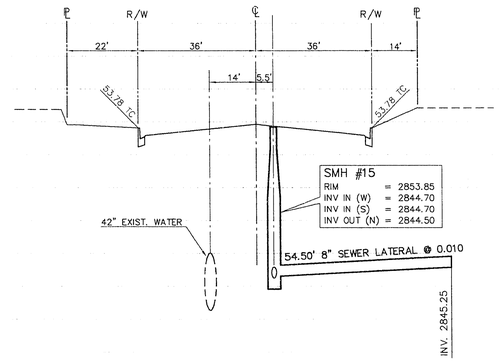

D — SEWER LATERAL

TRAILWOOD DRIVE STA 42+37.78 SEE SW-7

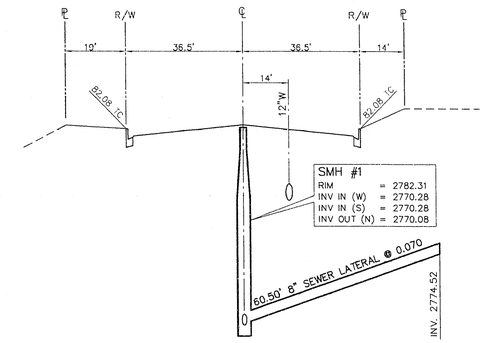

A — SEWER LATERAL

SNOW TRAILS STA 11+97.00 SEE SW-1

PROFILE SCALE	
HORIZONTAL	1" = 20
VERTICAL	1" = 5

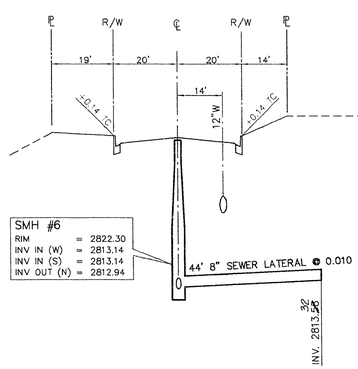

B — SEWER LATERAL

SNOW TRAILS STA 25+05.00 SEE SW-4

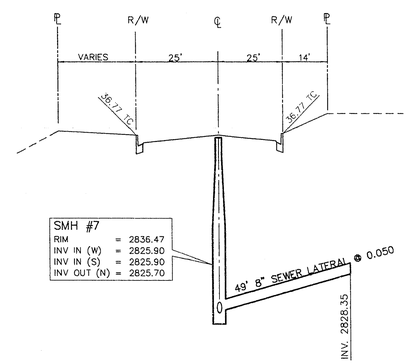

C — SEWER LATERAL

SNOW TRAILS STA 29+40.00 SEE SW-4

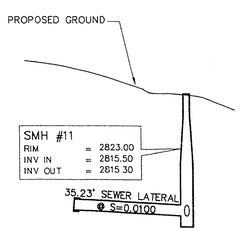

F — SEWER LATERAL

SEE GP-1

1. CONDITIONAL APPROVAL OF VALVED OUTLET (6" AND LARGER).
   THE WATER PLANS SHOW ONE OR MORE VALVED OUTLETS EXTENDING OUT OF PAVED AREAS, INSTALLATION OF THESE OUTLETS IS ACCEPTABLE HOWEVER, IF THE OUTLETS ARE INCORRECTLY LOCATED OR NOT USED FOR ANY REASON WHEN THE PROPERTY IS ACTUALLY DEVELOPED, THE DEVELOPER SHALL ABANDON THE OUTLETS AT THE CONNECTION TO THE ACTIVE MAIN IN, ACCORDANCE WITH THE DISTRICT'S STANDARDS AND AT THE DEVELOPER'S EXPENSE.

2. REDUCED PRESSURE PRINCIPLE ASSEMBLY.
   AN APPROVED REDUCED PRESSURE PRINCIPLE ASSEMBLY(S) (RPPA) SHALL BE INSTALLED PER STANDARD PLATE NO. 11. NO WATER SHALL BE TAKEN FROM A SERVICE REQUIRING BACKFLOW PREVENTION UNTIL THE RPPA HAS BEEN SUCCESSFULLY TESTED BY THE L.V.V.W.D. ANY BLOCK WALL OR OTHER FENCE MATERIAL SHALL BE DESIGNED AND CONSTRUCTED AROUND THE OUTSIDE OF THE EASEMENTS(S), SO AS TO ALLOW THE DISTRICT DIRECT ACCESS TO THE RPPA FROM THE ADJACENT RIGHT OF WAY.

3. ABANDONMENT OF EXISTING SERVICE(S) 2" AND SMALLER, AND 2" RPPA
   THE CONTRACTOR SHALL NOTIFY THE INSPECTION DIVISION AT THE L.V.V.W.D. (PHONE 702-258-3227) 48 HOURS PRIOR TO THE REQUESTED REMOVAL TIME TO ALLOW THE DISTRICT TO TAKE THE FINAL METER READING AND REMOVE THE METER. THE CONTRACTOR MAY THEN BEGIN REMOVAL PROCEDURES FOR THE AFFECTED SERVICE AS FOLLOWS: EXISTING SERVICE LATERALS THAT ARE ABANDONED FROM EXISTING WATER MAIN SHALL HAVE THE CORPORATION STOPS TURNED OFF AT THE MAIN, THE LATERAL CUT 6" DOWNSTREAM FROM THE CORPORATION STOP AND AGAIN CUT 6" DOWNSTREAM FROM THE FIRST CUT SO THAT A 6" PIECE OF THE EXISTING SERVICE LATERAL IS REMOVED. IF THE CORPORATION STOP IS DAMAGED BEYOND REPAIR OR PULLED FROM THE EXISTING WATER MAIN, THE MAIN SHALL BE REPAIRED AT THE CONTRACTOR'S EXPENSE, IN A MANNER APPROVED BY THE L.V.V.W.D. IF THE CORPORATION STOP IS NOT WATER TIGHT, THE CONTRACTOR SHALL NOTIFY L.V.V.W.D. CUSTOMER SERVICE (PHONE 870-4194) FOR FURTHER DIRECTION.

LVVWD 7/21/99 DATE

11-2-99

307Y-4271-3

REV.	DATE	DESCRIPTION	DATE	APPROVAL

RECORD DRAWING
RECORD INFORMATION PROVIDED BY FIELD CONTRACTOR

RECOMMENDED
10584 R.P.E.
BARY R. BUSSY
11/15/99 DATE

ENGINEER
THE KEITH COMPANIES NEVADA
4692 230 INDUSTRIAL RD LAS VEGAS, NV 89102 (702) 733-8080

DRAWING CITY ENGINEERING ARCHITECTURE LANDSCAPE ARCHITECTURE CONSTRUCTION MANAGEMENT

HOWARD HUGHES PROPERTIES
SUMMERLIN VILLAGE 7 - THE TRAILS - UNIT 3
SEWER LATERAL PROFILES

SHEET
SW-16
SHT 45 OF 54