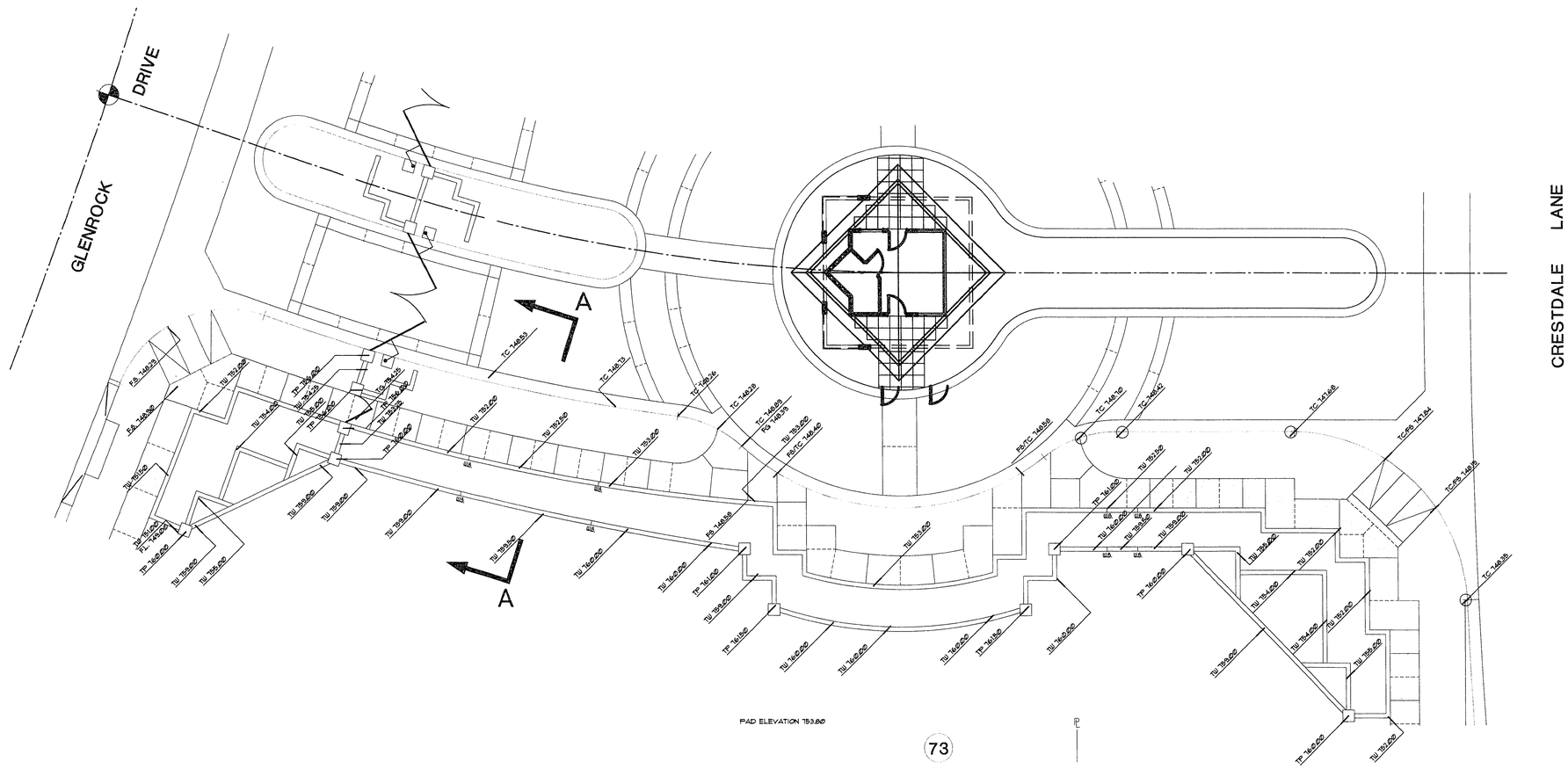

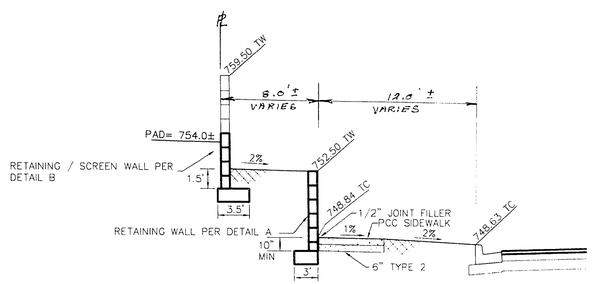

SECTION A-A
1"= 5'

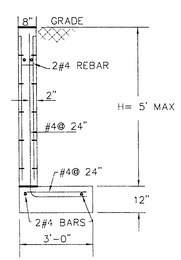

DETAIL A

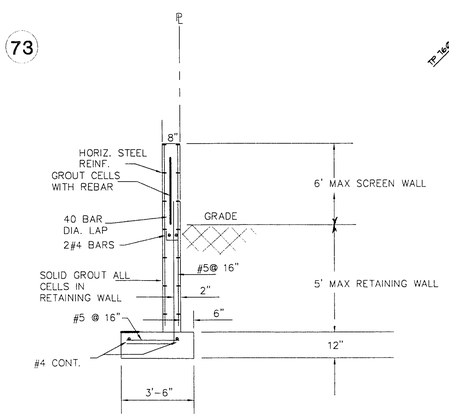

DETAIL B

CITY OF LAS VEGAS DATE

NORTH

DATE	REV.	DATE	DESCRIPTION	DATE	APPROVAL
	☆	10/6/95	SHEET 2A ADDED TO SET		

RECOMMENDED

PROFESSIONAL ENGINEER JAMES T. ANTICH CIVIL NEVADA
10/4/95

ENGINEER
THE KEITH COMPANIES NEVADA
4002 SO. INDUSTRIAL RD. LAS VEGAS, NV 89103 (702) 733-0350
• PLANNING • ENGINEERING • LANDSCAPE ARCHITECTURE • LAND SURVEYING • CONSTRUCTION MANAGEMENT

HOWARD HUGHES PROPERTIES
SUMMERLIN VILLAGE 7 - THE TRAILS- MOUNTAIN TRAILS
ENTRY WALL DETAIL

SHEET
GP-2A
21A OF 27

11-19-228 107Y-4371