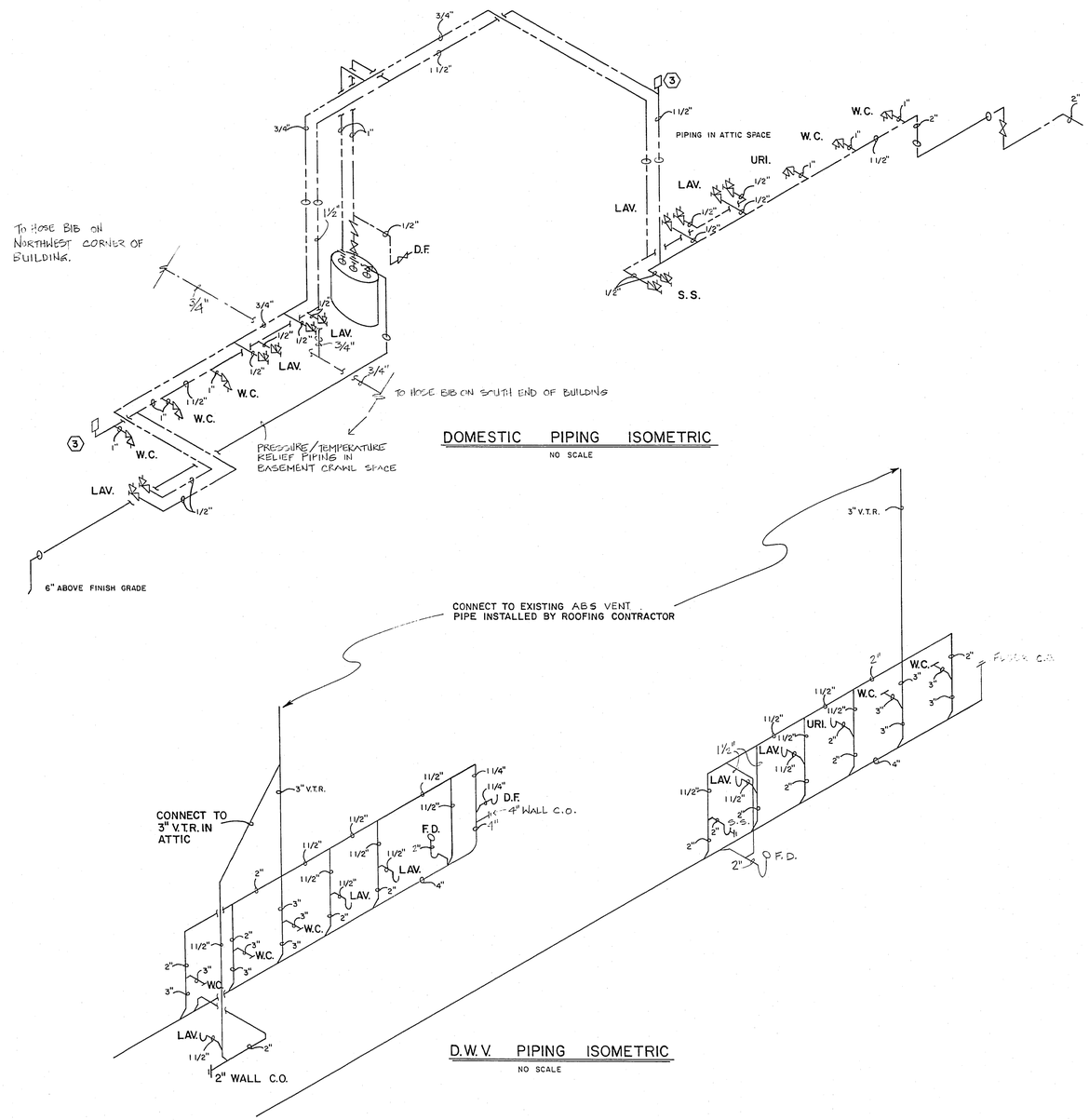

DOMESTIC PIPING ISOMETRIC

NO SCALE

D.W.V. PIPING ISOMETRIC

NO SCALE

DETAIL I

SEWER LINE CONNECTIONS

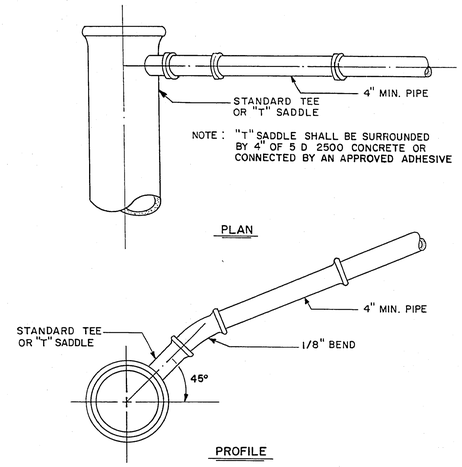

NOTES:

SEWER LATERAL MUST HAVE A MIN. COVER OF 3 FEET. MIN. GRADE OF SEWER LATERAL IS 2%. TWO CUTS IN CONNECTIONS SHALL NOT BE MADE IN THE SAME LENGTH OF PIPE.

RELIABLE PLUMBING AND HEATING COMPANY, INC.

CONTRACT DRAWING

NOV 30 1982

Revisions	Date

Scale (h) | Scale (v) | W.A. 2041

Fld. bk. no. N/A | Date 9 - 30 - 80

Design by BERT ANZAI | Drawn by NORMA GOMEZ

APPROVED BY CITY ENGINEER

Department of Public Services — Engineering Design Division

PLUMBING ISOMETRICS

WEST SIDE SCHOOL RENOVATION

Drawing no. 513 - 53 | P-3 / 57

7-23

SHEET 57 OF 57