105361

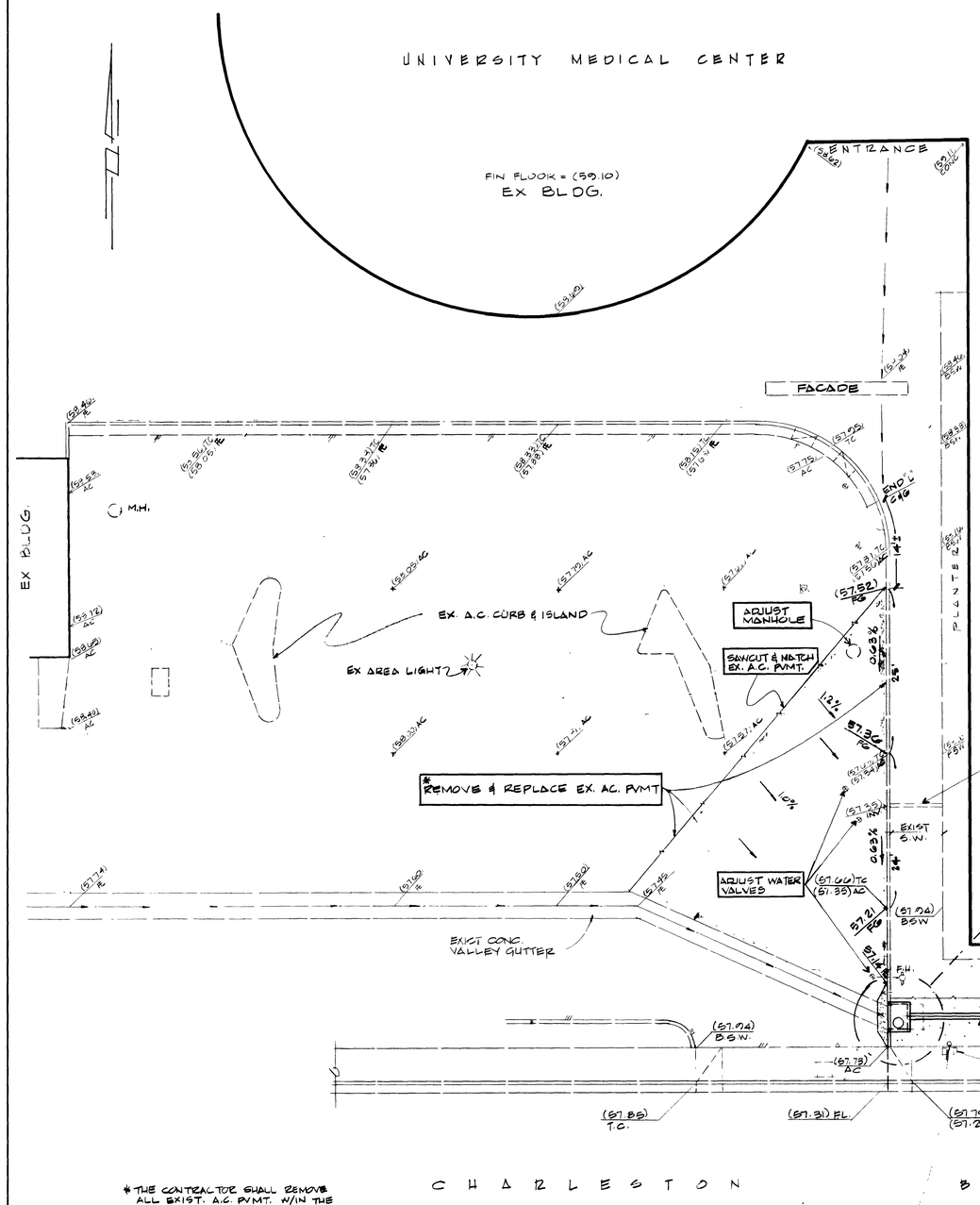

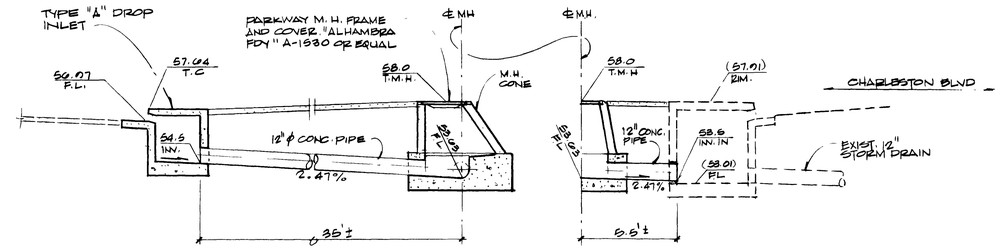

PROFILE

SCALES: HORIZ. 1" = 4'
VERT. 1" = 4'

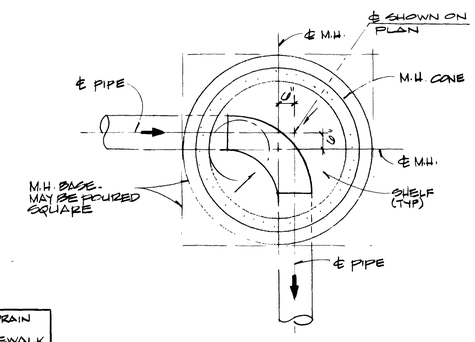

MANHOLE BASE

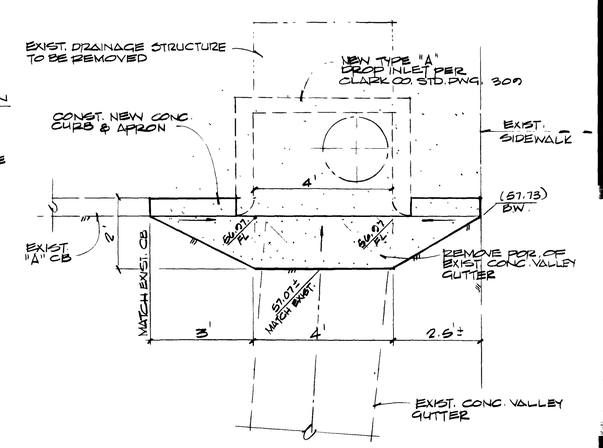

ENLARGED PLAN

* THE CONTRACTOR SHALL REMOVE ALL EXIST. A.C. PVMT. W/IN THE LIMITS OF CONSTRUCTION.

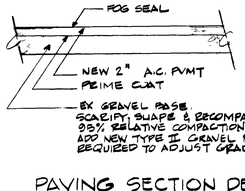

PAVING SECTION DETAIL
NO SCALE

CHARLESTON BLVD.

CAUTION!!
EXIST. PEDESTRIAN SIGNAL AND UNDERGROUND CONDUIT THIS AREA. SEE NOTE 2, SHT. 1

Avoid cutting underground utility lines. It's costly.

Call before you Dig.

1-800-227-2600

UNDERGROUND SERVICE ALERT (USA)

REGISTERED PROFESSIONAL ENGINEER ROBERT A. McCORMICK JR. CIVIL 5-1-95 No. 5081 STATE OF NEVADA

REV. NO.	DESCRIPTION	BY	APPROVAL	DATE

SCALE (H) 1" = 10'
SCALE (V)
DES. D.G.
DR. D.G.
SECTION 33 T. 20 S. R. 61 E

ALCA ENGINEERING & SURVEYING, INC.
820 SOUTH VALLEY VIEW BOULEVARD
LAS VEGAS, NEVADA 89107-4411
TELEPHONE (702) 878-3338

JOB TITLE UNIVERSITY MEDICAL CENTER
MODIFICATION TO EXIST. DRAINAGE & PARKING LOT

JOB NO. 7712-1-13

SHEET 2 OF 2

4.3.95

107-V1469

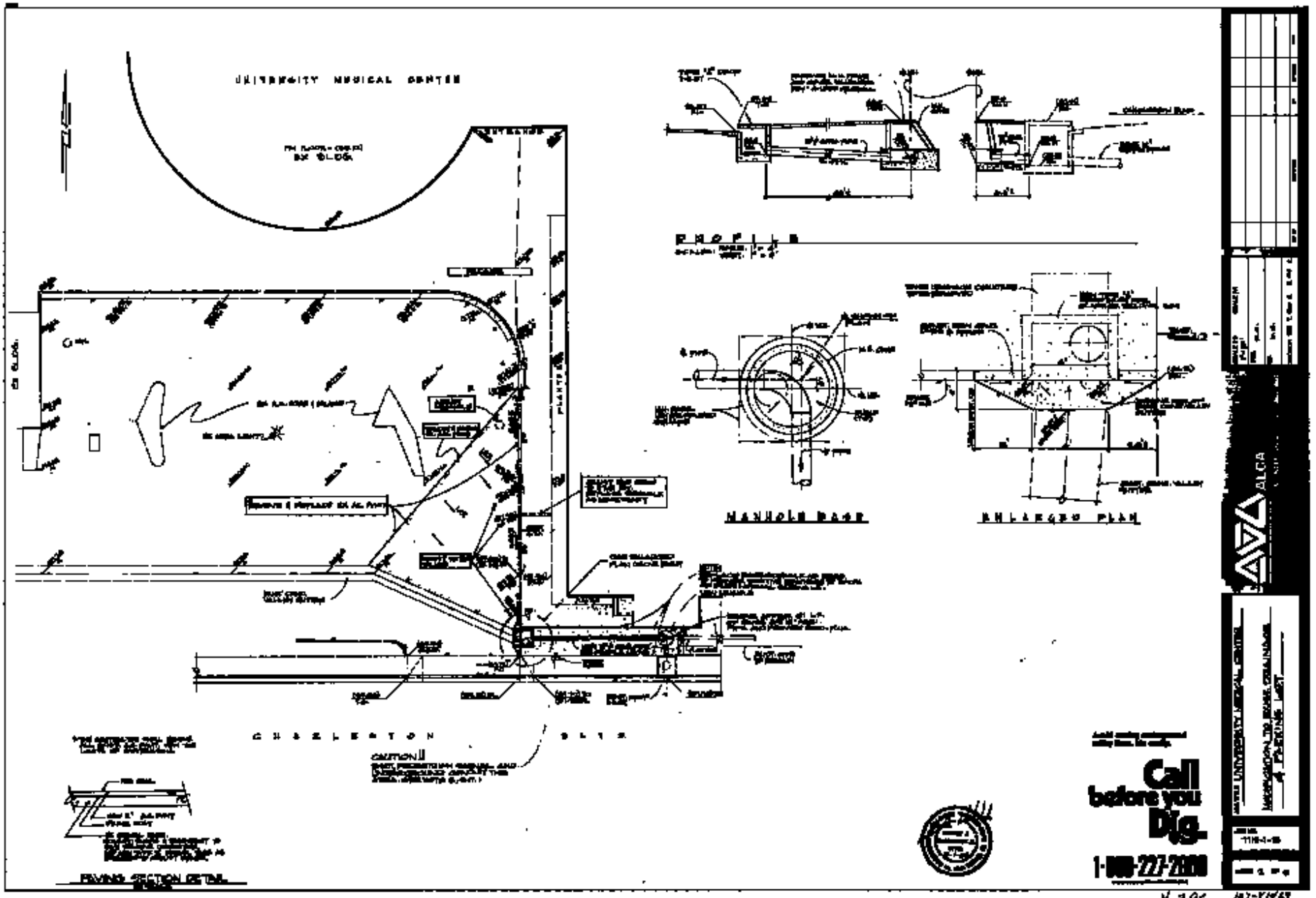
UNIVERSITY MEDICAL CENTER
PROFILE
MANHOLE BASE
ENLARGED PLAN
CHARLESTON
Call before you Dig.
1-800-227-2600
ALCA

4-3-05