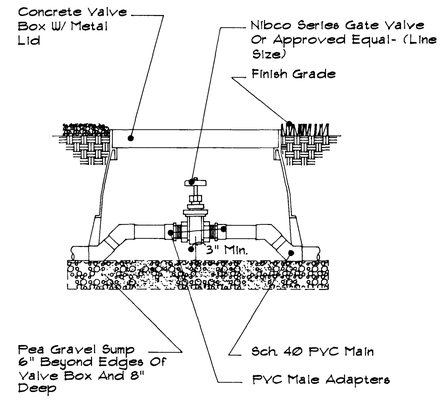

Gate Valve

(G-ValveDeg)

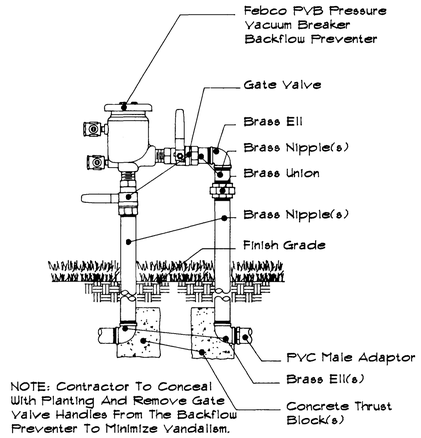

Pressure Vacuum Breaker

(PVB-BackDeg)

N.T.S.

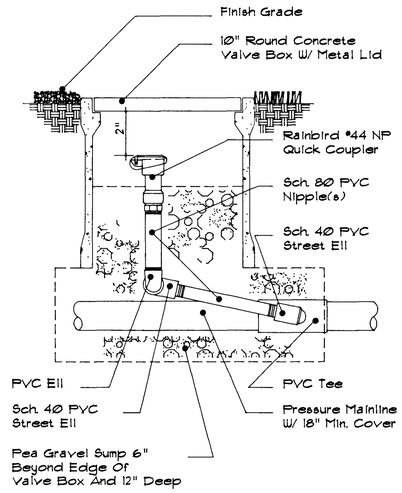

Quick Coupler Valve

(G-ValveDeg)

N.T.S.

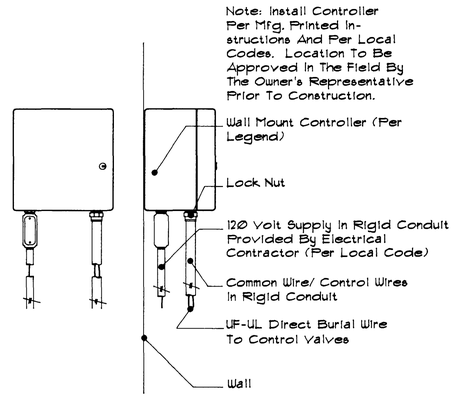

Automatic Controller

(Clock-ElDeg)

N.T.S.

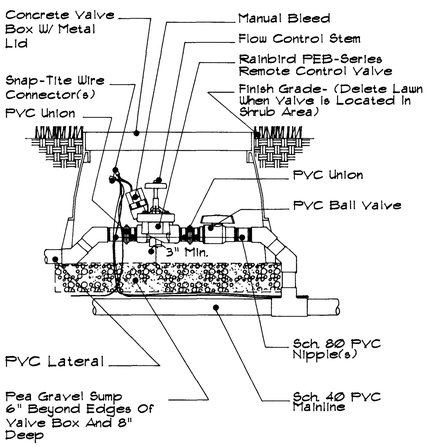

Automatic Control Valve

(C-ValveDeg)

N.T.S.

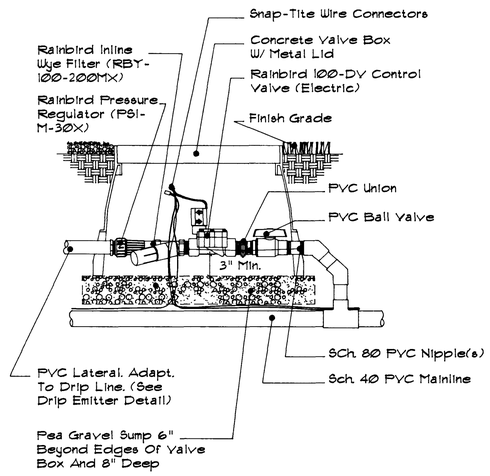

Drip Valve Assembly

N.T.S.

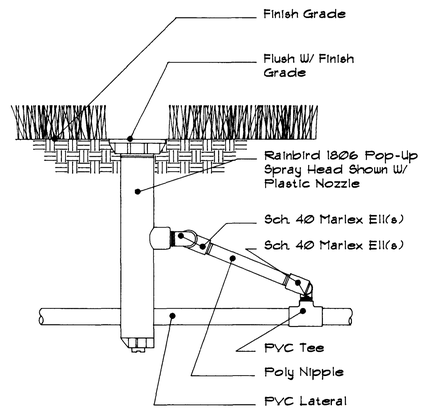

Rainbird Spray Head

N.T.S.

Emitter Quantities		
Plant Size	Qty.	GPH.
1 Gal.	1	1
5 Gal.	2	1
15 Gal.	3	2
24" Box	6	2

NOTE:
Install Emitters On The Uphill Side Of The Rootball At Slope Locations. Equally Space The Required Number Of Emitters Around The Perimeter Of The Plant. (At Edge Of Rootball)

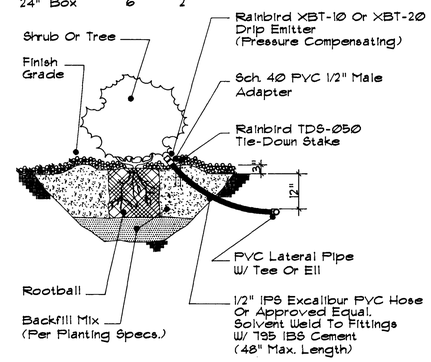

Drip Emitter

(DripEmit.Deg)

N.T.S.

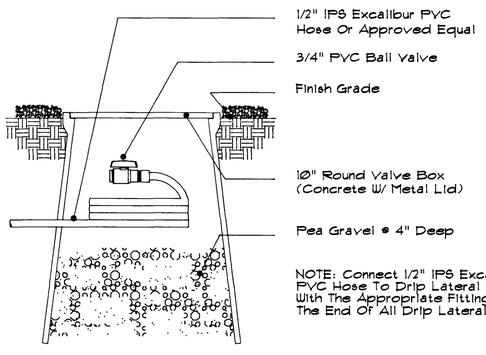

Drip End Ball Valve

N.T.S.

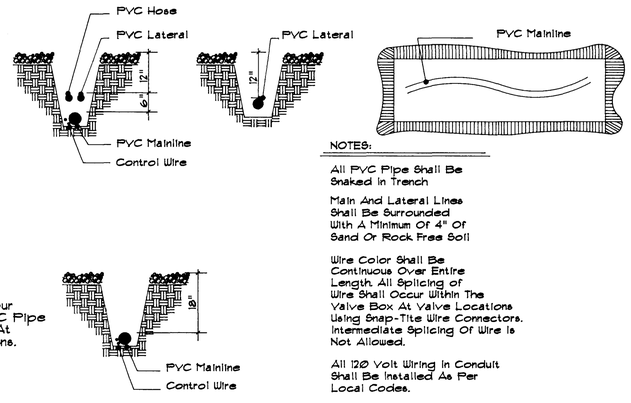

NOTES:

All PVC Pipe Shall Be Snaked In Trench

Main And Lateral Lines Shall Be Surrounded With A Minimum Of 4" Of Sand Or Rock Free Soil

Wire Color Shall Be Continuous Over Entire Length. All Splicing Of Wire Shall Occur Within The Valve Box At Valve Locations Using Snap-Tite Wire Connectors. Intermediate Splicing Of Wire Is Not Allowed.

All 120 Volt Wiring In Conduit Shall Be Installed As Per Local Codes.

Trench Detail

N.T.S.

Avoid cutting underground utility lines. It's easy.

Call before you Dig.

1-800-227-2600

DATE | REVISIONS

W.A. # | DESIGN BY CML

SCALE (V) | DATE AUGUST 1996

SCALE (H) N.T.S. | FLD. BK. #

ARCHITECTURAL SERVICES

CLAIR M. LEWIS, RLA, ASLA

CITY OF LAS VEGAS NEVADA

DEPT. OF NEIGHBORHOOD SERVICES

PROJECT: BEL AIRE APARTMENTS

SHEET: IRRIGATION DETAILS

REGISTERED LANDSCAPE ARCHITECT CLAIR M. LEWIS STATE OF NEVADA

DRAWING NO. 107-V2570 | 8/8

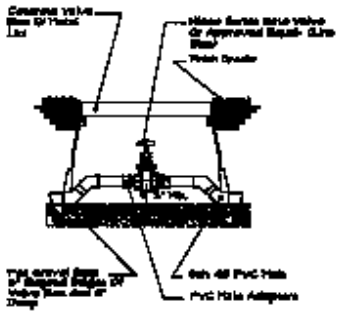

Gate Valve

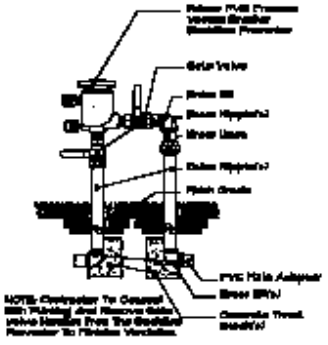

Pressure Vacuum Breaker

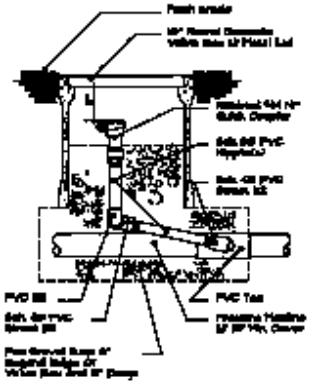

Quick Coupler Valve

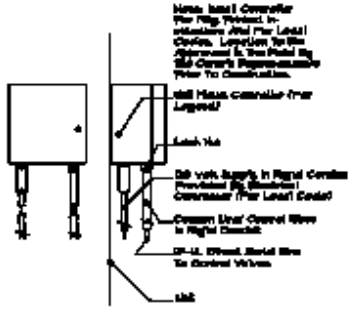

Automatic Controller

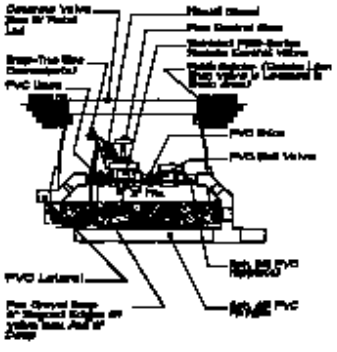

Automatic Control Valve

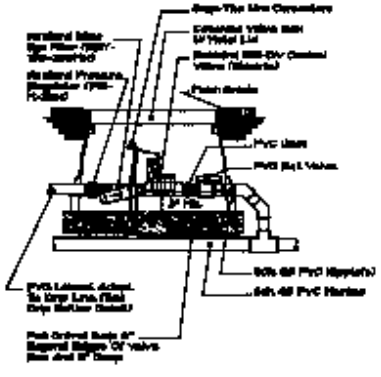

Drip Valve Assembly

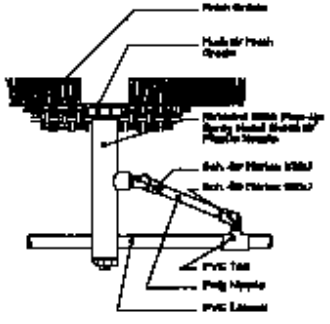

Rainbird Spray Head

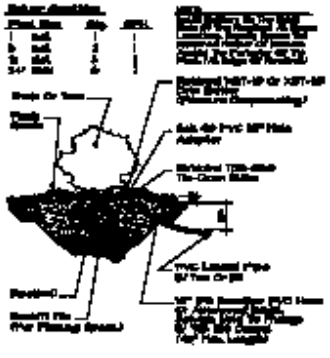

Drip Emitter

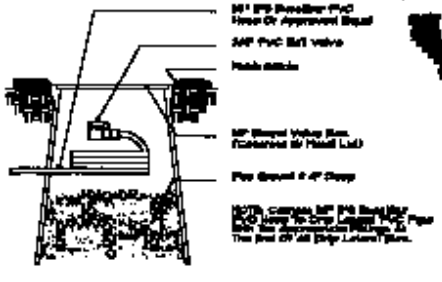

Drip End Ball Valve

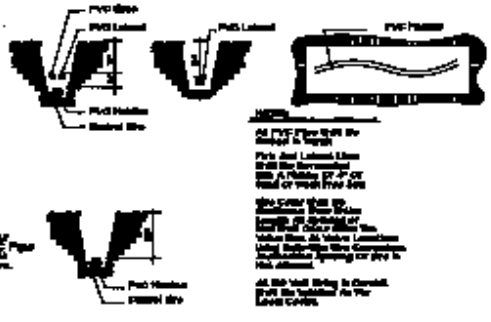

Trench Detail

Call before you dig.

1-800-227-2600

DEPT. OF NEIGHBORHOOD SERVICES

ARCHITECTURAL SERVICES
CLARK H. LEWIS, M.A., AIA

BEL AIRE APARTMENTS

IRRIGATION DETAILS

103-Plans

6/8