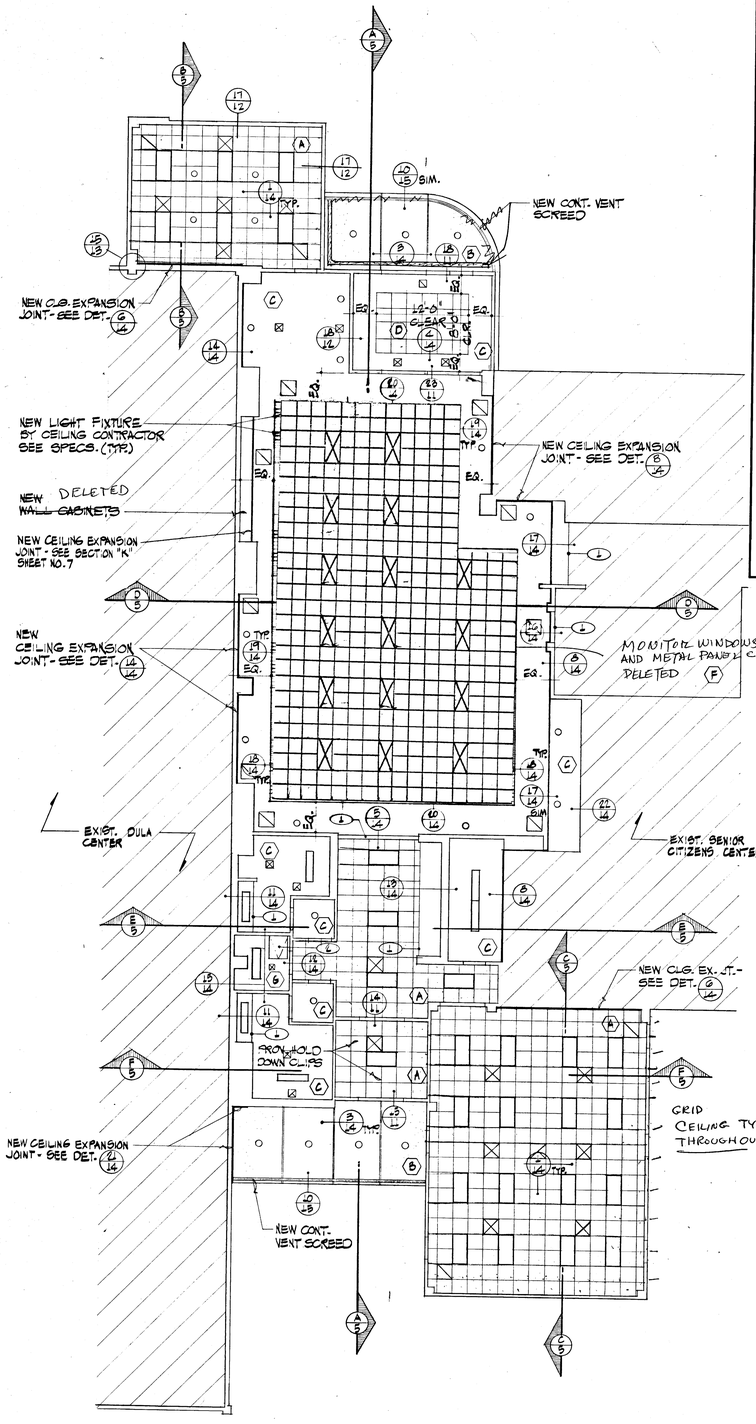

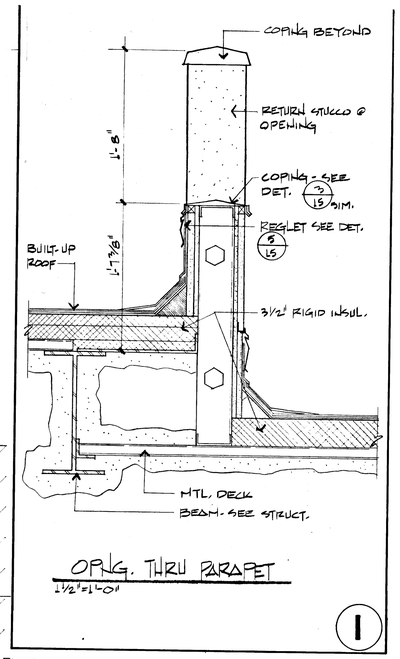

OPNG. THRU PARAPET

1 1/2" = 1'-0"

REFLECTED CEILING PLAN NOTES :

1. CONTRACTOR SHALL SUBMIT CEILING SHOP DRAWINGS PRIOR TO COMMENCING WORK (MIN. SCALE 1/4" = 1'-0")
2. SEE ROOM FINISH SCHEDULE FOR CEILING HEIGHTS

REFLECTED CEILING PLAN LEGEND

- A — NEW 2' X 2' SUSPENDED ACOUSTIC TILE CEILING ON EXPOSED BLACK GRID SYSTEM - SEE SPECS. TYPICAL THROUGHOUT BLDG
- B — NEW SUSPENDED STUCCO CEILING (PAINTED) OVER METAL LATH - SEE SPECS.
- C — NEW 5/8" TYPE "X" SUSPENDED GYP. BD. - PAINTED
- D — NEW 2' X 2' PRISMATIC LENS OVER PARABOLIC LOUVERS ON EXPOSED GRID SYSTEM - SEE SPECS. COLOR OF GRID SYSTEM TO MATCH LOUVERS - PROVIDE HOLD DOWN CLIPS
- E — NEW METAL LINEAR CEILING SYSTEM - SEE SPECS. - CUSTOM COLOR AS SELECTED BY ARCHITECT. LIGHT FIXTURES TO BE PROV. & INSTALLED BY CEILING CONTRACTOR. REFER TO ALT. "D" - SEE SPECS.
- F — EXISTING CEILING TO REMAIN AS IS
- G — EXPOSED ROOF STRUCTURE

ALT D - 2X2 @ 11'6" alg. lgt. 16 2X4 FIXTURES

- NEW ELECTRICAL LIGHT FIXTURE SEE ELECT. DWGS.
- 1 — NEW GYP. BD. SOFFIT
- 2 — NEW ROOF HATCH - SEE DET. 14/16

REFLECTED CEILING PLAN

SCALE 1/8" = 1'-0"

ASSUMED NORTH — TRUE NORTH

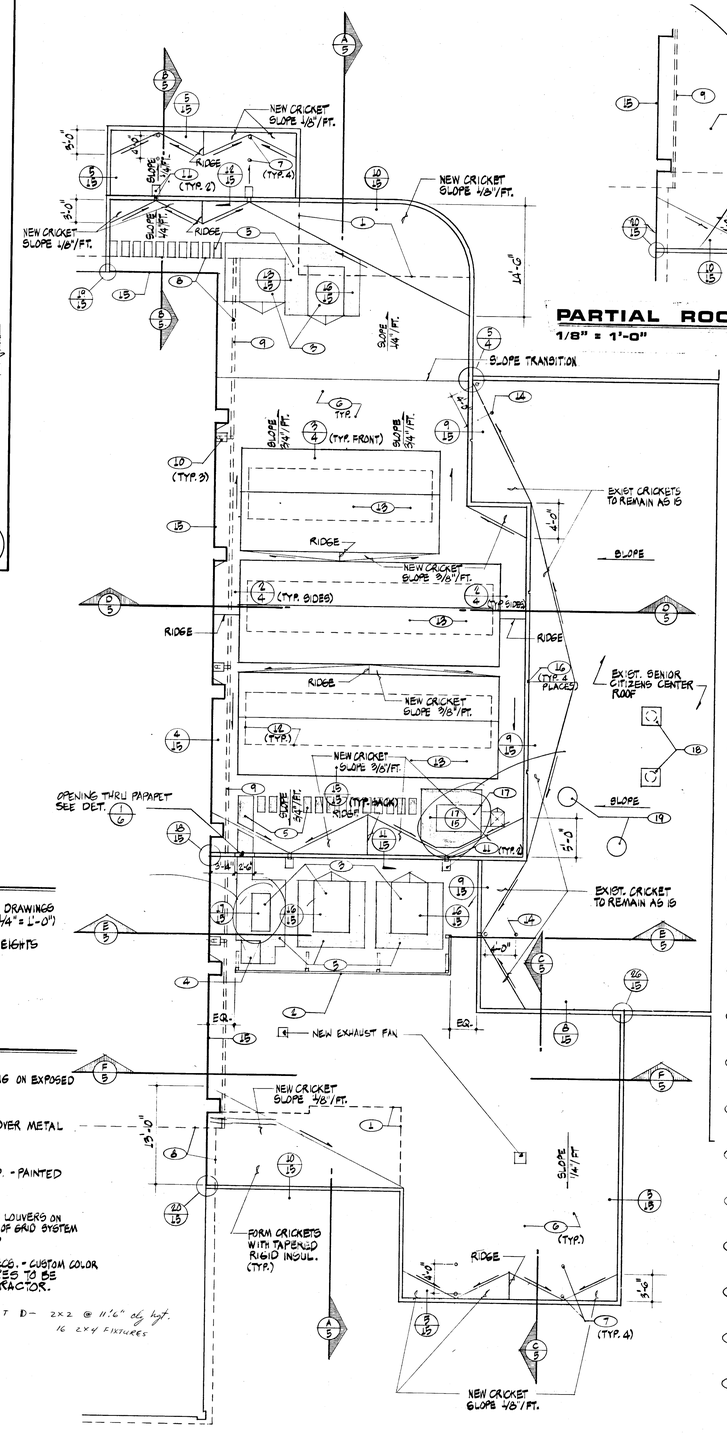

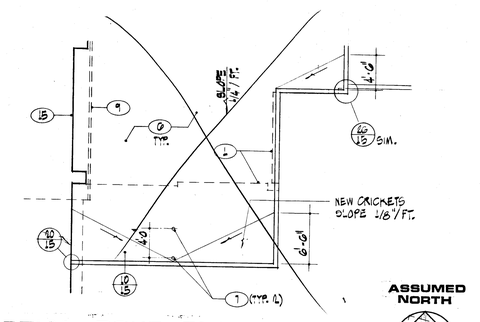

PARTIAL ROOF PLAN

1/8" = 1'-0"

(ALTERNATE G)

ASSUMED NORTH — TRUE NORTH

ROOF PLAN LEGEND

1. LINE OF BUILDING WALL BELOW
2. NEW A/C UNITS ENCLOSURE (PRE-FORMED METAL SIDING OVER STEEL FRAME) - SEE SPECS. & DET. 14/16
3. NEW A/C UNITS - SEE MECH. DWGS.
4. NEW ROOF HATCH - SEE DET. 14/16
5. NEW WALKWAY PROTECTION BOARDS - SEE SPECS. & DET. 1/15
6. NEW BUILT-UP ROOFING OVER 3 1/2" RIGID INSULATION OVER METAL DECK - SEE SPECS.
7. NEW ROOF DRAIN AND OVERFLOW DRAIN - SEE DET. 1/15 & PLUMB. DWGS.
8. LINE OF EXISTING DULA CENTER ROOF ABOVE
9. NEW SHEET METAL GUTTER ANCHORED TO DULA CENTER FASCIA BD. (PAINTED) SLOPE 1/8"/FT ABOVE - SEE DET. 6/15
10. NEW SHEET METAL DOWNSPOUT AND SPLASH PAN (PAINTED) - SEE DET. 9/15
11. NEW ROOF SCUPPER AND SPLASH PAN
12. LINE OF CEILING OPENING BELOW
13. NEW MONITOR WINDOW STRUCTURE - SEE DET. 7/14
14. NEW OVERFLOW DRAIN (FLASH WATERTIGHT). RE-WORK EXIST ROOF DRAIN LEADER TO EXTERIOR WALL SEE PLUMB. DWGS. CLOSE UP EXIST. OVERFLOW SCUPPER & SEAL WATERTIGHT. REMOVE EXIST. ROOF DRAIN LEADER AT GRADE LEVEL AND CLOSE UP OPENING.
15. NEW EXPANSION JOINT - SEE DET. 4/15
16. NEW STUCCO EXPANSION JOINT AT FACE OF NEW PARAPET - SEE DET. 12/16
17. NEW MAKE-UP AIR UNIT - SEE MECH. DWGS.
18. REMOVE EXIST. EXHAUST FAN & RETURN TO OWNER. PROVIDE SHEET MTL. CAP OVER DUCT OPENING & SEAL WATERTIGHT
19. NEW EXHAUST FAN - SEE MECH. DWGS. PROVIDE NEW ROOF OPENING & FLASH WATERTIGHT SEE STRUCT. DWGS. FOR SUPPORT OF OPNG. SEE SHT. 17 FOR LOCATION OF NEW EXHAUST FAN.

ROOF PLAN

SCALE 1/8" = 1'-0"

ASSUMED NORTH — TRUE NORTH

4330 513-45J

1/5/8

All ideas, designs, arrangements and plans indicated, or presented by this drawing are instruments of service, are owned by and the property of CAMBEIRO & CAMBEIRO LTD. The use of these plans and or specifications shall be restricted to the original site for which they were prepared, and publication thereof is expressly limited to such use. Reproduction, publication or reuse by any method in whole or in part, is prohibited. None of such ideas, designs, arrangements or plans shall be used by or disclosed to any person, firm, agency, or corporation for any purpose whatsoever without the written permission of CAMBEIRO & CAMBEIRO LTD. Visual contact with these plans and specifications shall constitute prima facie evidence of acceptance of these restrictions.

REVISIONS
1 ZE/ISSUED 5-9-86

DATE JULY 07, 1985
DRAWN J.D.R. & V.B.
CHECKED J.D.R.
DO NOT SCALE DRAWINGS

CAMBEIRO & CAMBEIRO LTD.
ARCHITECTS PLANNERS
MEMBERS OF THE AMERICAN INSTITUTE OF ARCHITECTS
ARTURO B. CAMBEIRO A.I.A. DOMINGO CAMBEIRO A.I.A.
LAS VEGAS NEVADA

PROJECT NO. 8522.03

SHEET NO. 6 OF 19 OF 22