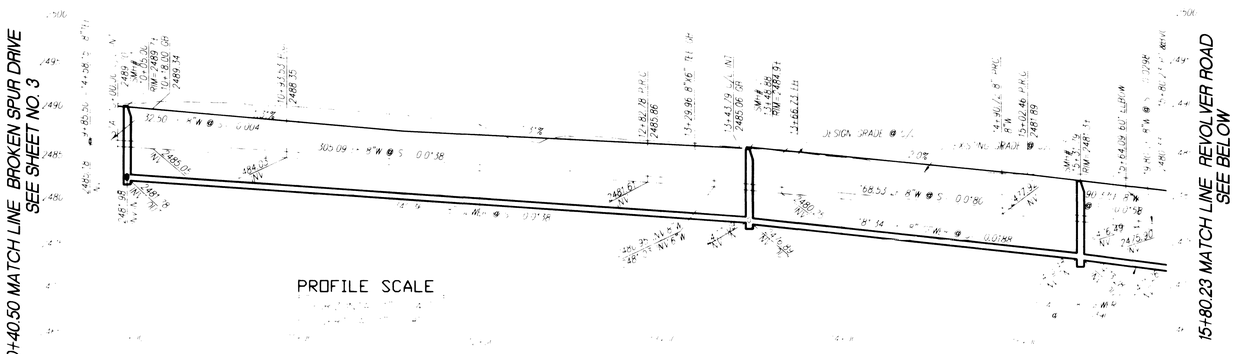

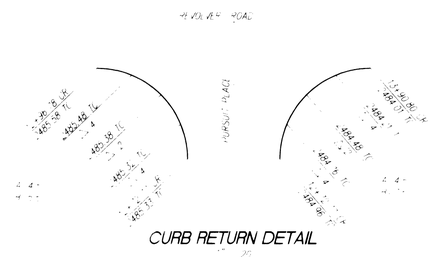

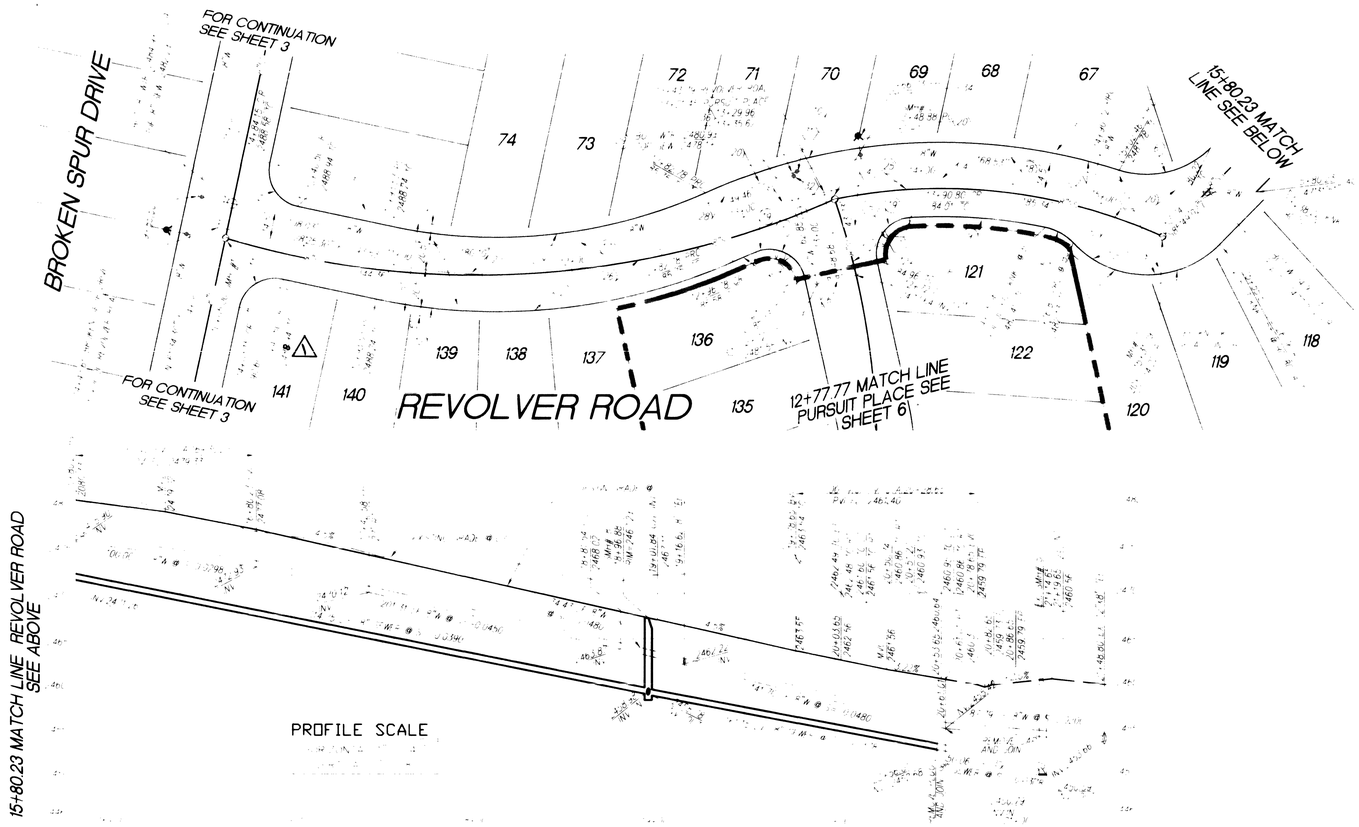

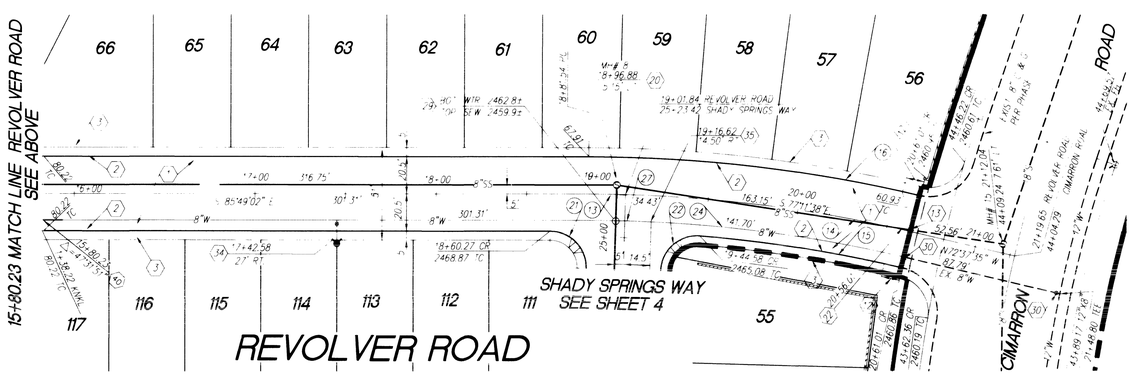

NORTH

NORTH

CURVE DATA

	40°00'00"	20.00'	11.42'	20.00'
	9°08'18"	100.00'	89.25	17.89
	19°08'	100.00'	5°01'	30.6'
	50°18'12"	100.00'	58.66'	87.74'
	1°[illegible]'54"	20.50'	[illegible]	11.38'
	1°[illegible]'54"	20.00'	10.16'	10.16'
	2°[illegible]'42"	16.00'	48.16'	48.19'
	1°[illegible]'06"	10.00'	6.87'	8.67'
	1°[illegible]'21"	19.50'	8.50'	19.5'
	4°[illegible]'20"	120.50'	14.69'	27.89'
	16°08'38"	79.50'	36.53'	41.20'
	16°08'18"	120.50'	102.18'	104.58'
	11°29'32"	79.53'	20.10'	10.15'
	11°29'32"	79.53'	39.16'	9.86'
	18°41'26"	49.03'	16.16'	16.19'
	17°[illegible]'21"	300.03'	184.19'	92.50'
	16°08'38"	285.50'	180.10'	93.16'
	10°42'[illegible]"	114.50'	68.53'	36.34'
	48°58'44"	20.00'	14.55'	23.41'
	18°29'31"	180.00'	30.37'	45.58'
	11°29'32"	20.00'	11.44'	20.53'
	47°08'29"	20.00'	12.51'	21.13'
	35°13'58"	450.14'	41.12'	21.88'
	10°36'45"	65.03'	41.10'	11.05'
	14°59'51"	395.00'	185.54'	95.84'
	30°16'56"	485.78'	144.36'	79.[illegible]
	12°14'42"	65.03'	14.43'	[illegible]
	19°30'[illegible]"	114.50'	39.46'	14.78'
	40°[illegible]'	79.50'	[illegible]	[illegible]

CONSTRUCTION NOTES

OVER 6" TYPE 1 AB

BENCH MARK

BM NO. 1, V9020NES, ALUMINUM TAG AT THE INTERSECTION OF ELKHORN ROAD AND DURANGO DRIVE ELEVATION = 2528.49

Call before you Dig. 1-800-227-2600

GRAPHIC SCALE

40 0 20 40 80 160

(IN FEET)
1 inch = 40 ft

PROFESSIONAL ENGINEER · STATE OF NEVADA · WILLIAM E. WHEELER · CIVIL · No. 010088

1	4/14/95	REVISED TO CONFORM STANDARDS	11/15/95	RWM

WATT/MORADI CO.

ELKHORN SPRINGS PARCEL 3

PLAN AND PROFILE FOR REVOLVER ROAD

SHEET NO.: 5

5 OF 16 SHEETS

11-8-97 RS 107Y-4299-3