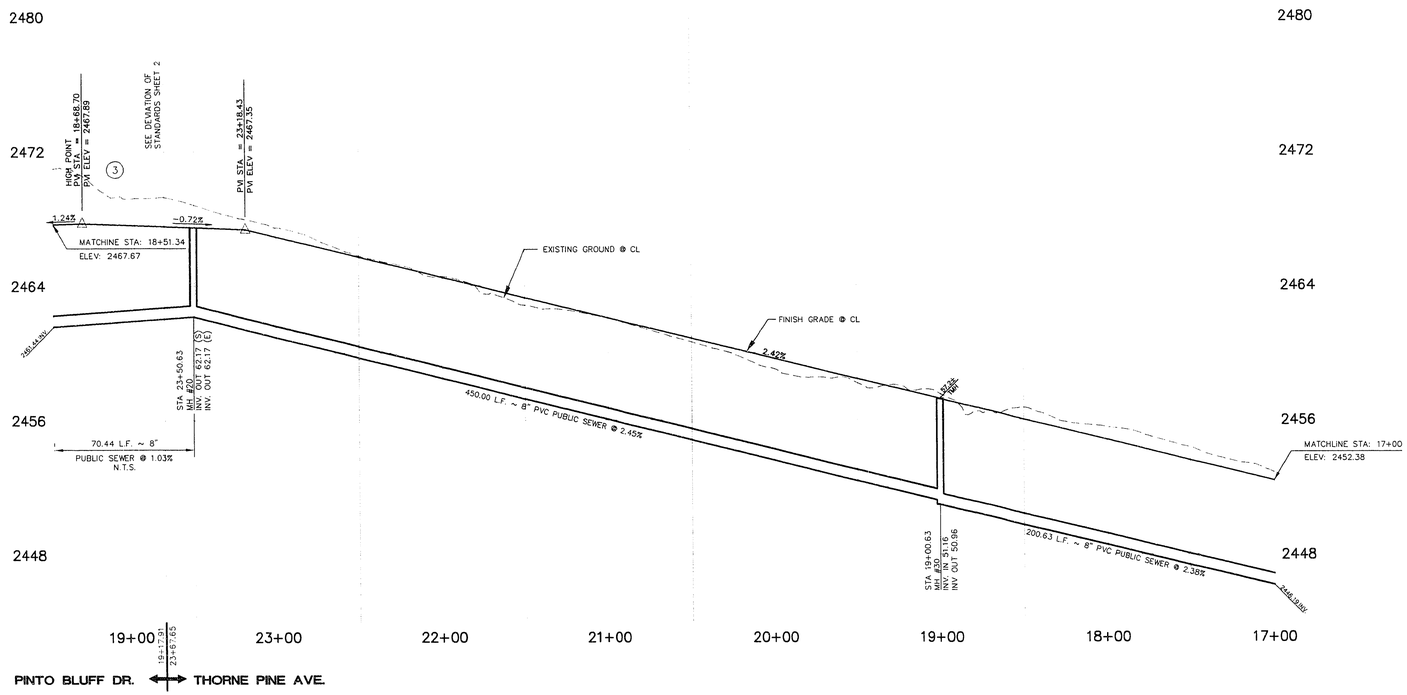

THORNE PINE AVE.

PLAN AND PROFILE

SCALE
HORIZ. 1" = 40"
VERT. 1" = 4"

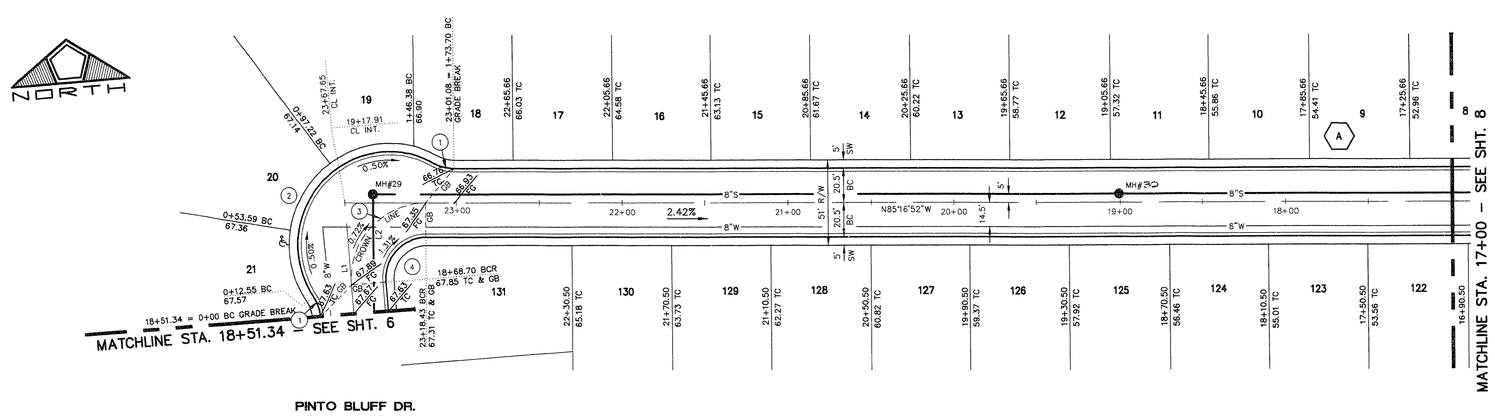

BACK OF CURB DATA TABLE

CURVE	DELTA	RADIUS	LENGTH	TANGENT
1	28°46'19"	25.00'	12.55'	6.41'
2	152°02'14"	56.00'	148.60'	224.91'
3	94°29'37"	45.50'	75.04'	49.22'
4	94°29'37"	25.00'	41.23'	27.04'
5	90°00'00"	20.00'	31.42'	20.00'
6	90°00'00"	25.00'	39.27'	25.00'
7	90°00'00"	45.50'	71.47'	45.50'
8	147°32'37"	56.00'	144.21'	192.40'

LINE	BEARING	DISTANCE
L1	S00°13'31"W	66.57'
L2	S04°43'08"W	70.44'

THORNE PINE AVE.

GRAPHIC SCALE

40 0 20 40 80 160

(IN FEET)
1 inch = 40 ft.

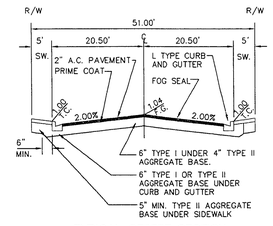

TYPICAL STREET SECTION

NO SCALE

NO.	DESCRIPTION	DATE	APP'D

RECOMMENDED:

DATE

DENNIS GROSZINSKY
NEVADA REG. #
11711

DATE : 1/18/96
DRAWN BY :
DESIGNED BY :
CHECKED BY : FC
JOB NO. : 0168.0090
SCALE : 1"= 40'

PENTACORE

CIVIL ENGINEERING • LAND SURVEYING • PLANNING
CONSTRUCTION MANAGEMENT • COST ANALYSIS CONSULTING
6763 WEST CHARLESTON BOULEVARD
LAS VEGAS, NEVADA 89102 (702)258-0115

RHODES HOMES

THE MEADOWS AT ELKHORN SPRINGS – UNIT 3

THORN PINE AVENUE
STREET PLAN AND PROFILE

SHEET 7 OF 12

11-29-92

107Y-4457-3

D:\0168\0090\UNIT-3\PP\PP7-B Fri Aug 30 14:12:20 1996 From the computer of M.S.G.

DISK #