PROJECT BENCHMARK

RIVET AND SQUARE ALUMINUM PLATE NORTHEAST CORNER OF FIREHYDRANT BASE, 400 FT. SOUTH OF SAHARA AVE. WEST SIDE OF TENAYA WAY.
BM. # 36
STA. = 7C10
10N4
ELEVATION: = 747.920 METERS, NAVD 88
= 2453.80 FT

BASIS OF BEARING

THE BASIS OF BEARINGS FOR THIS SURVEY IS THE NORTH 03°16'20" W BEING THE WEST LINE OF THE SOUTH EAST QUARTER (SE 1/4) OF SECTION 3, TOWNSHIP 21 SOUTH, RANGE 60 EAST, M.D.B. & M. AS SHOWN ON RECORDED PARCEL MAP FILE 38, PAGE 55.

CURVE TABLE

CURVE	RADIUS	LENGTH	TANGENT	CHORD	DELTA
C1	25.0000'	39.9489'	25.6884'	35.8322'	91°33'22"

CONSTRUCTION NOTES

1. CONST. TEMPORARY PAVEMENT 2" AC / 4" TYPE II
2. CONST. SIDEWALK DRAIN PER STD. DWG. NO. 236. MATCH TO EXISTING CHANNEL
3. CONST. SIDEWALK RAMP PER STD. DWG. NO. 235 CASE 1 A = 8.0' B = 8.0'
4. ADJUST EXIST. ELEC. VAULT TO GRADE (AS NECESSARY).
5. ADJUST EXIST. WATER VAULT TO GRADE (AS NECESSARY).
6. INSTALL #3 1/2 PULL BOX
7. CONST. 3" A.C. ON 4" TYPE II AGG. BASE ON 9" TYPE I AGG. BASE
8. INSTALL OBJECT MARKERS W1-8 @ 20' O.C.

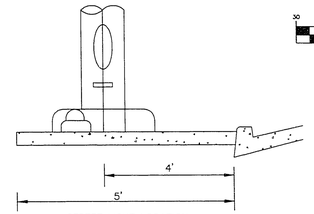

STREET LIGHT LOCATION

STREET LIGHT NOTE:
ALL HAND HOLE COVERS MUST BE INSTALLED, POLE CAPS POURED, AND PULL BOX LIDS BOLTED DOWN PRIOR TO ENERGIZING CIRCUIT. ALL WIRE MUST HAVE THW INSULATION.

GRAPHIC SCALE

30 0 15 30 60 120

(IN FEET)
1 inch = 30 ft.

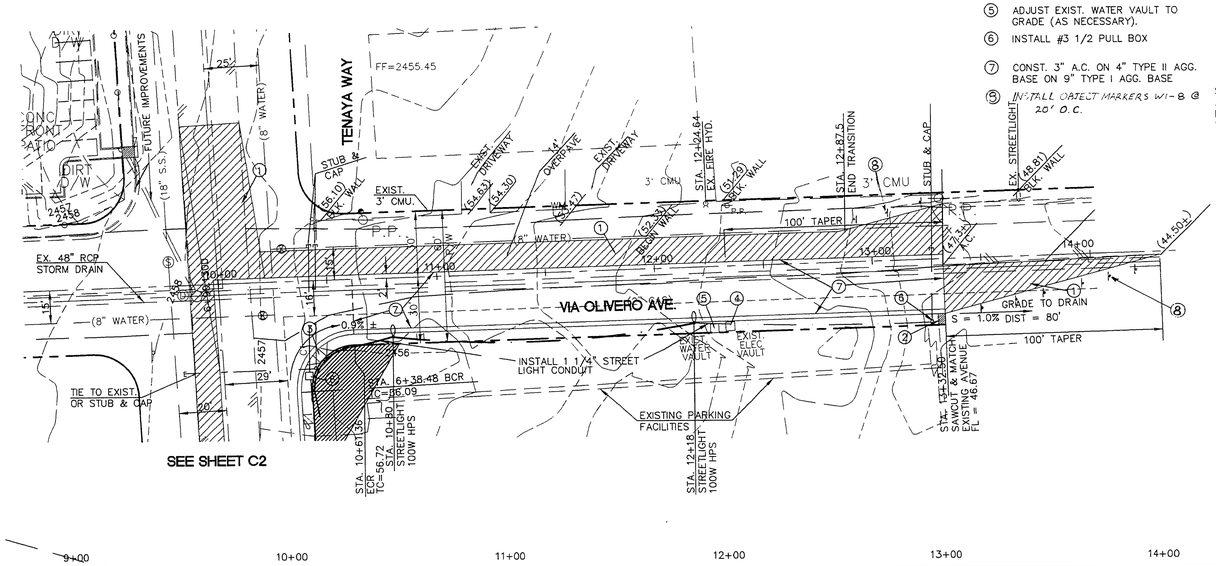

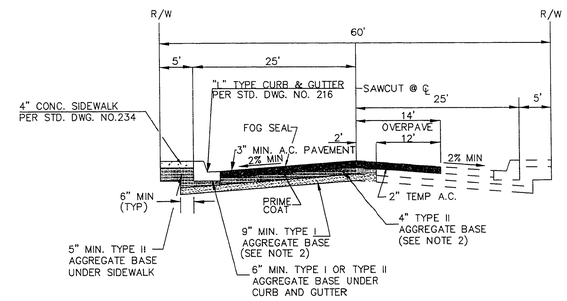

1. FINAL A.C. PAVEMENT SURFACE (INCLUDING OPEN GRADE IF USED) SHALL BE 1/2" ABOVE LIP OF GUTTER.
2. STRUCTURAL SECTION SHOWN IS BASED ON AN "R" VALUE OF 20. OTHER STRUCTURAL SECTIONS MAY BE APPROVED IF BASED ON ENGINEERING ANALYSIS BASED ON "R" OR "CBR" VALUES DETERMINED BY SOIL TESTING. IN NO CASE SHALL THE A.C. THICKNESS BE LESS THAN SHOWN.

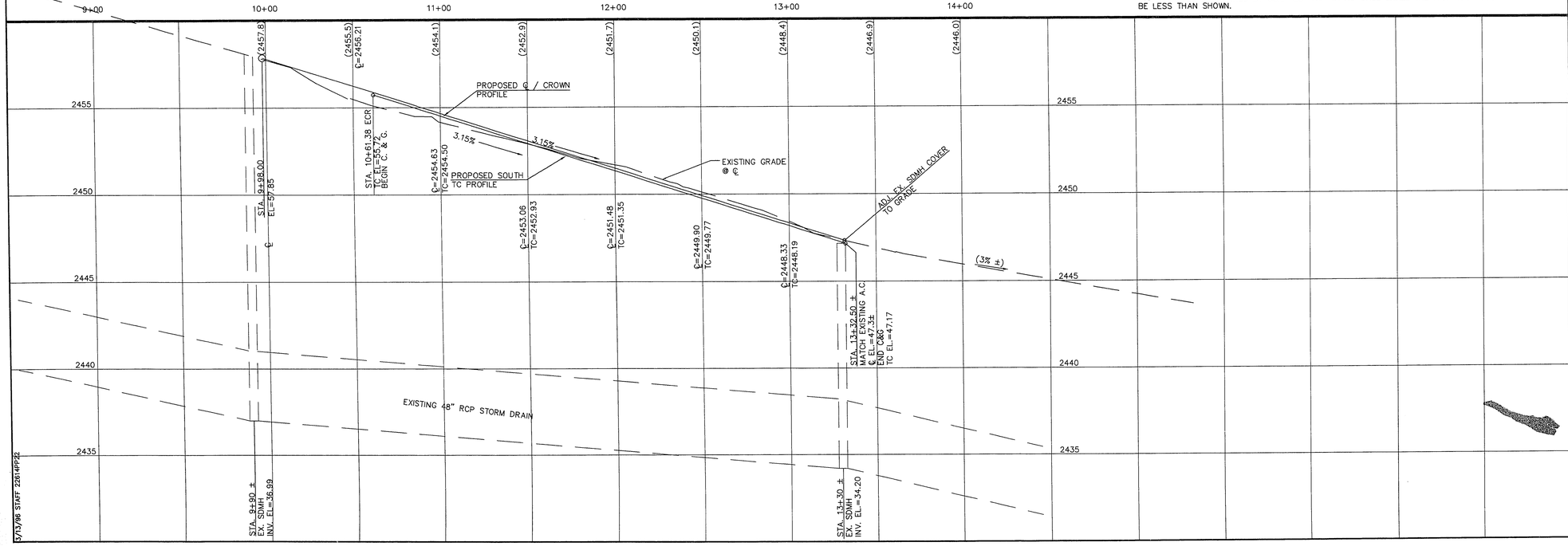

5/13/96 STAFF 2614PP2

REV.	BY	DATE	DESCRIPTION	APPROV'D

SCALE 1" = 30'
ACCT. NO. 30-22814
F.B. NO.

DESIGN J.H.C.
DRAWN S.M.F.
CHECKED
D.D.W.
DATE 3/13/96

PLAN AND PROFILE FOR ST. JOSEPH, HUSBAND OF MARY CATHOLIC CHURCH, PHASE II

CPS
CONSULTING ENGINEERS OF NEVADA, INC.
CALDWELL RICHARDS SIBERSEN
4290 S. MARYLAND PARKWAY
LAS VEGAS, NEVADA 89119
PHONE (702)737-3407
FAX (702)737-3094

JAMES H. CHILOS 4/26/96 CIVIL

ENGINEER'S SEAL

SHEET	DRWG. NO.
C3 OF 5	2614

107-V2511

30-2-17