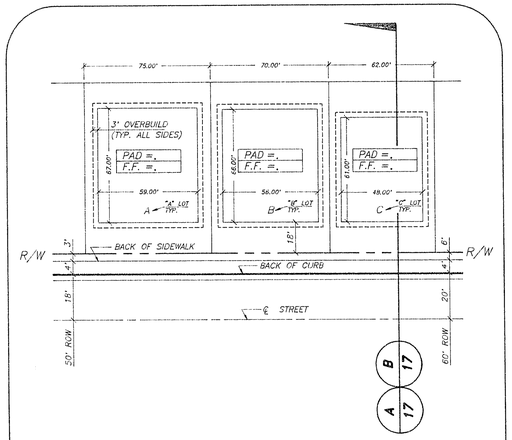

NOTE:
SECTION "D" TYPICAL FOR ALL SIDEYARD GRADING, EXCEPT WHERE SIDEYARD RETAINING WALL IS REQUIRED.

ROUGH GRADING PLAN

1/17

SINGLE FAMILY NOT TO SCALE

GRADING NOTES

1. INDICATED GRADES ARE FINISHED GRADES.
2. THE ROUGH GRADING PLANS SHALL BE ON THE JOB SITE AT ALL TIMES. THE ROUGH GRADING SHALL BE FINISHED IN CONFORMANCE WITH THE LINE AND GRADES SHOWN ON THE PLANS. THE GRADING QUANTITIES ARE BASED ON THE ELEVATION AND ROUGH GRADING DETAILS SHOWN ON THE PLANS. ANY DEVIATIONS FROM THE PLANS WILL RESULT IN QUANTITY CHANGES.
3. CARE SHALL BE EXERCISED IN GRADING CORNER LOTS.
4. • ROUGH PAD ELEVATIONS SHALL BE GRADED TO WITHIN 0.1' OF THE PAD ELEVATIONS SHOWN ON THE PLANS. WHEN GRADING IS COMPLETE PER THE PLANS, THE CONTRACTOR SHALL NOTIFY THE ENGINEER SO THAT THE LOTS CAN BE INSPECTED. AT THAT TIME THE ENGINEER SHALL ALSO DECIDE IF ANY ADDITIONAL DITCHES OR BERMS ARE REQUIRED. THE CONTRACTOR IS REQUESTED NOT TO REMOVE ANY OF HIS ROUGH GRADING EQUIPMENT UNTIL HE RECEIVES GRADING APPROVAL FROM THE ENGINEER.
5. SOILS REPORT BY WESTERN TECHNOLOGIES, INC. PROJECT NO. 4127J192 DATED SEPTEMBER 29, 1987.

   " CLEARING AND GRUBBING OPERATIONS WILL RESULT IN SOME LOSS OF MATERIAL. EXCAVATION AND RECOMPACTION OF THE ONSITE SOILS WILL RESULT IN SHRINKAGE LOSSES. A SHRINKAGE FACTOR OF ABOUT 25 PERCENT IS ESTIMATED TO BE APPLICABLE FOR THE SOFT AND LOOSE TO MEDIUM DENSE DEPOSITS. A SHRINKAGE FACTOR OF ABOUT 5 TO 10 PERCENT SHOULD BE APPLICABLE FOR DENSE TO VERY DENSE DEPOSITS. THE CEMENTED DEPOSITS WILL HAVE A BULKAGE FACTOR WHEN EXCAVATED AND RECOMPACTED. AS AN EXAMPLE, A SHRINKAGE FACTOR OF 10 PERCENT WOULD MEAN IT WOULD REQUIRE 1.10 CUBIC YARDS OF EXCAVATED MATERIAL TO EQUAL 1.0 CUBIC YARD OF PROPERLY COMPACTED FILL. SUBSIDENCE OF THE SUBGRADE WHERE SOILS ARE SCARIFIED, WETTED AND RECOMPACTED WILL BE ON THE ORDER OF 0.1 FOOT OR LESS DEPENDING ON MATERIALS EXPOSED. "

   THE ABOVE QUOTATION IS FROM PAGE 13 OF THE REPORT UNDER MATERIAL VOLUME CHANGES.
6. EARTH QUANTITIES:

   EXCAVATION 41,146 C.Y.
   FILL 13,125 C.Y.

   A) THE ABOVE QUANTITIES DO NOT REFLECT LOSSES DUE TO SUBSIDENCE OR SHRINKAGE.

   B) THE ABOVE QUANTITIES DO REFLECT USING TYPE 1 GRAVEL BASE MATERIAL FOR STREET SECTIONS.

   C) THE ABOVE QUANTITIES DO NOT REFLECT ANY EARTHWORK WHICH MAY BE REQUIRED BY THE ENGINEER TO CONSTRUCT ADDITIONAL PROTECTIVE DITCHES OR BERMS NOT SHOWN ON THESE DRAWINGS.

• SEE NOTE 2 ON SECTION B

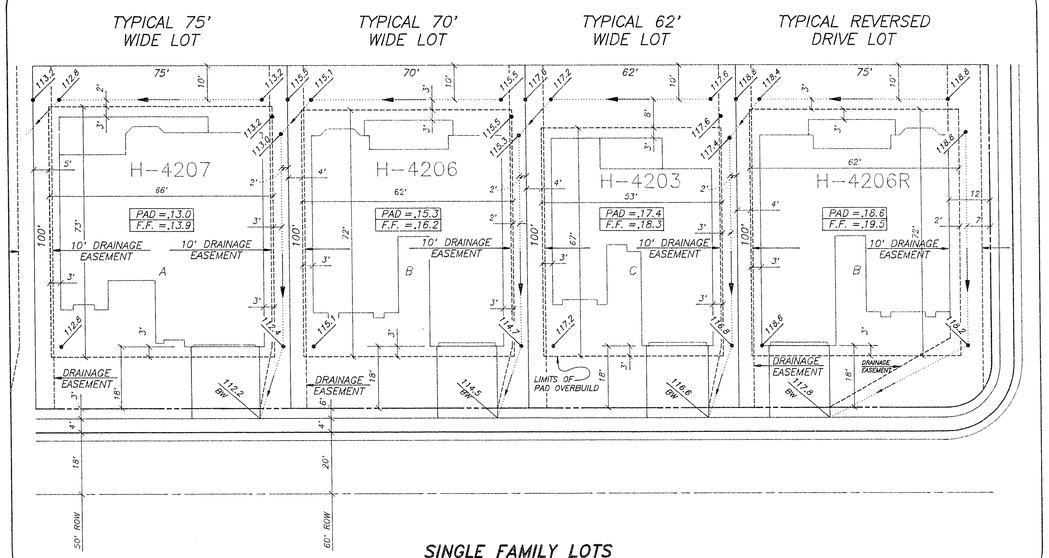

SINGLE FAMILY LOTS TYPICAL DRAINAGE GRADING PATTERNS

Call before you Dig.
1-800-227-2600
UNDERGROUND SERVICE (USA)

BENCHMARKS

CLV BENCHMARK: TOP OF CURB AT END OF CURB, WEST SIDE OF DURANGO DRIVE, 250' SOUTH OF WESTCLIFF BOULEVARD.
ELEVATION: 2610.16

PROJECT BENCHMARK: BRASS CAP IN IRON PIPE, 102' NORTH AND 64' WEST OF THE INTERSECTION OF SUN CITY BLVD. AND THOMAS W. RYAN BLVD..
N 532,694.6996, E 577,451.5457
ELEVATION: 2851.66

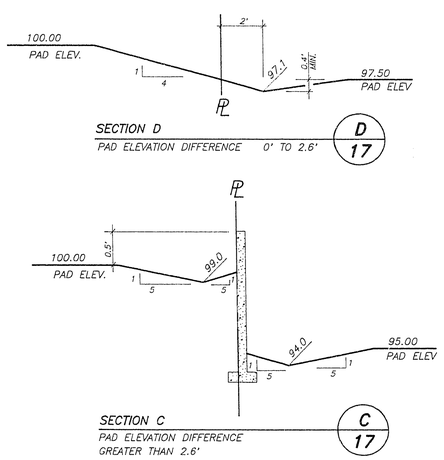

FINISHED GRADING SIDE YARD SECTIONS

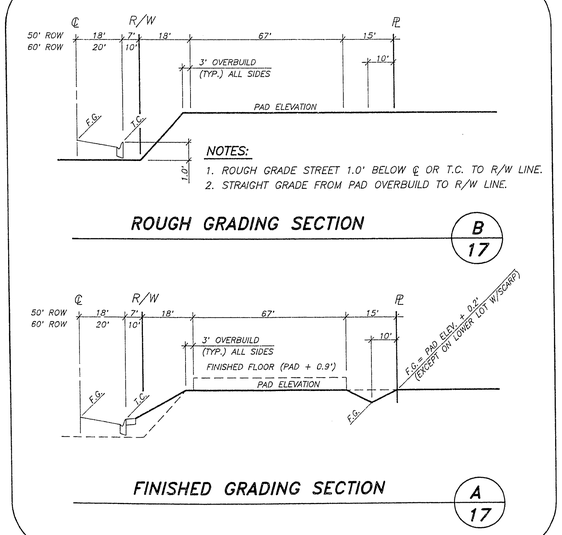

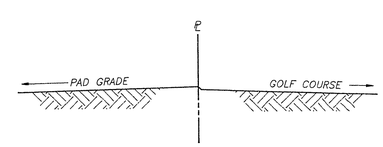

SECTION AT GOLF COURSE

E 17

N.T.S.
(AT HIGH SIDE OF LOT ONLY)

JOB NO. 701.180 PLOTTED: 05/20/93 07:59 am

REV	DATE	DESCRIPTION	C.L.V.	DATE

RECOMMENDED: MICHAEL D. ROSS CIVIL ENGINEER-STATE OF NEVADA PROFESSIONAL ENGINEER MICHAEL D. ROSS No. 6218 P.E. NO. 6218 DATE 11-5-92

G.C. WALLACE, INC.
Engineering/Architecture 1555 SOUTH RAINBOW BLVD./LAS VEGAS, NEVADA 89102

DEL WEBB COMMUNITIES, INC.
SUN CITY LAS VEGAS UNIT NO. 41 PHASE I
GRADING DETAILS

SHEET 17 OF 17 SHEETS

10-19-15 1079-4141-41