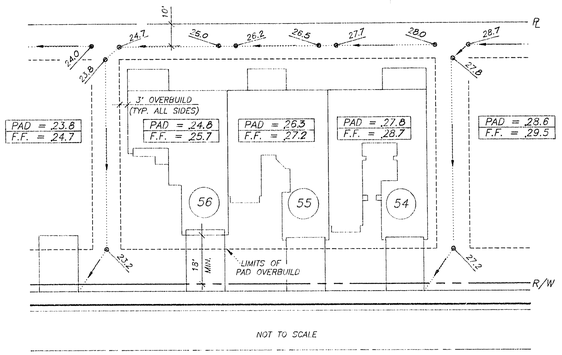

TYPICAL GARDEN VILLA LOT
DRAINAGE & GRADING

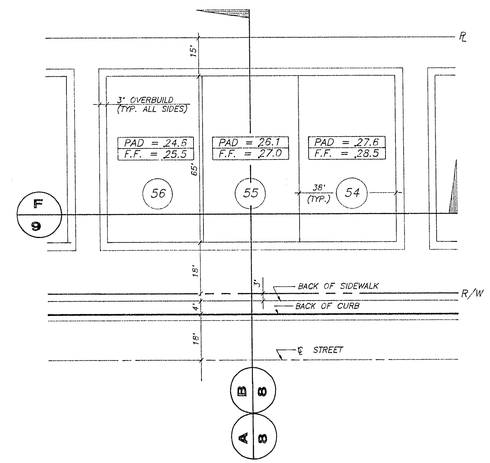

ROUGH GRADING PLAN 1/9
GARDEN VILLAS NOT TO SCALE

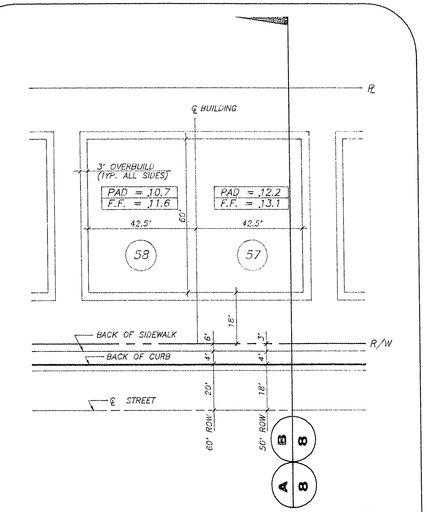

ROUGH GRADING PLAN 2/9
DUPLEX NOT TO SCALE

LEGEND

1	LOT NUMBER
1	BLOCK NUMBER
PAD = / F.F. =	PAD ELEVATION / FINISH FLOOR ELEVATION
PAD = / F.F. =	EXISTING PAD ELEVATION / EXIST. FINISH FLOOR ELEV.
	FUTURE PAD ELEVATION
56.21 TC or FG	GRADE BREAK
[54.10]	FUTURE ELEVATION
59.33	FINISHED GRADE ELEVATION
56.22 TC or FG	PROPOSED ELEVATION
(56.21)	EXISTING ELEVATION
	2:1 SCARP
	DITCH OR SWALE
	RETAINING WALL
4510	EXISTING CONTOUR

Call before you Dig.
1-800-227-2600
UNDERGROUND SERVICE (USA)

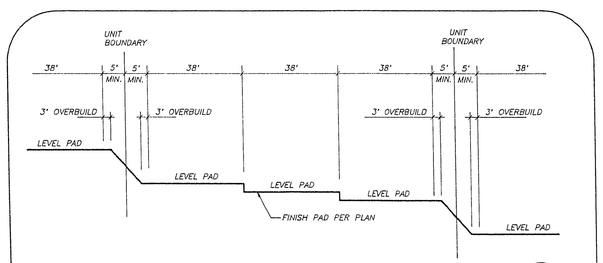

TYPICAL SECTION (PAD ROUGH GRADING PARALLEL WITH STREETS) F/9
GARDEN VILLAS NOT TO SCALE

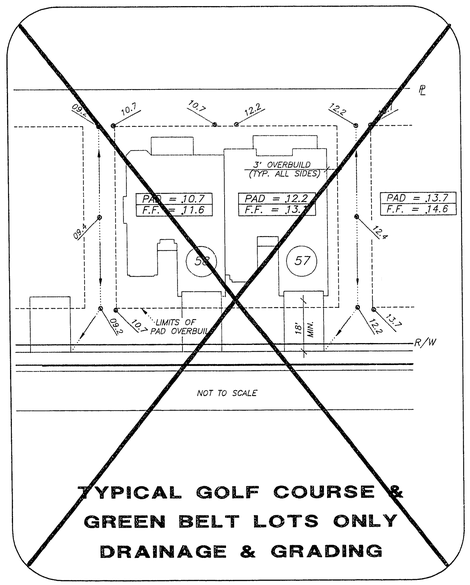

TYPICAL GOLF COURSE &
GREEN BELT LOTS ONLY
DRAINAGE & GRADING

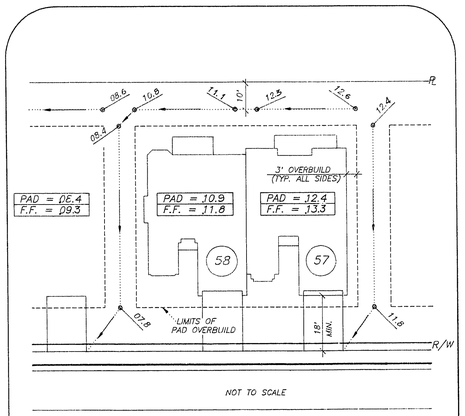

TYPICAL DUPLEX LOT
DRAINAGE & GRADING

REV.	DATE	DESCRIPTION	C.L.V.	DATE

RECOMMENDED
MICHAEL D. ROSS
6212 P.E. No.
10-14-92 DATE

G.C. WALLACE, INC.
Engineering/Architecture
1555 SOUTH RAINBOW BLVD/LAS VEGAS, NEVADA 89102

DEL WEBB COMMUNITIES, INC.
SUN CITY LAS VEGAS UNIT NO. 33A
GRADING DETAILS II

SHEET 9 OF 9 SHEETS

JOB NO. 701.132 PLOTTED: 10/16/91 10:34 am

10-8-97 1079-4141-33A