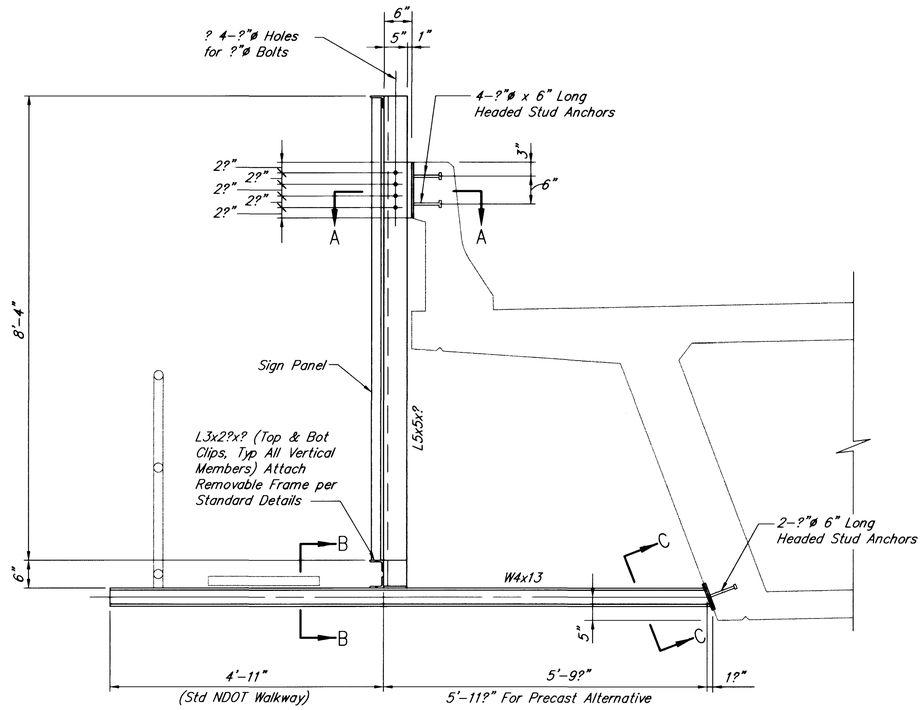

SIGN SUPPORT ELEVATION – NORTH SIDE

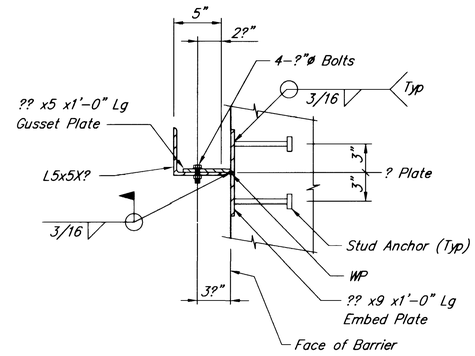

SECTION A-A

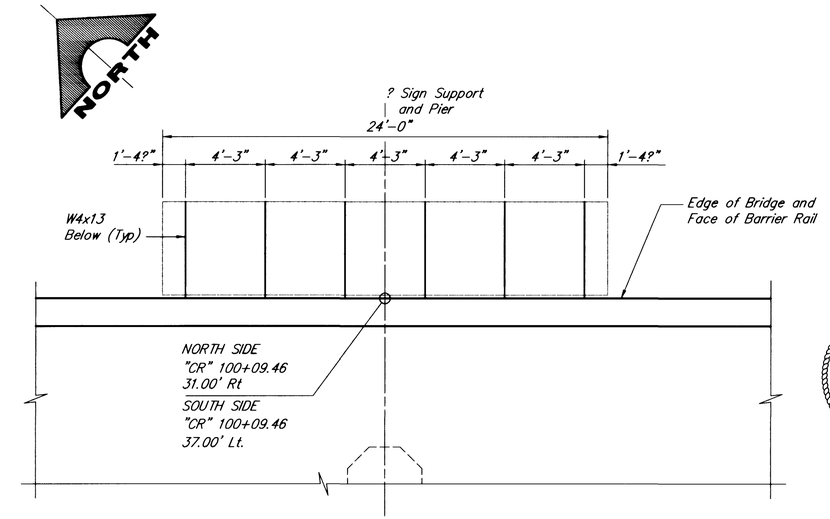

LOCATION PLAN – NORTH SIDE

South Mounted Sign Similar

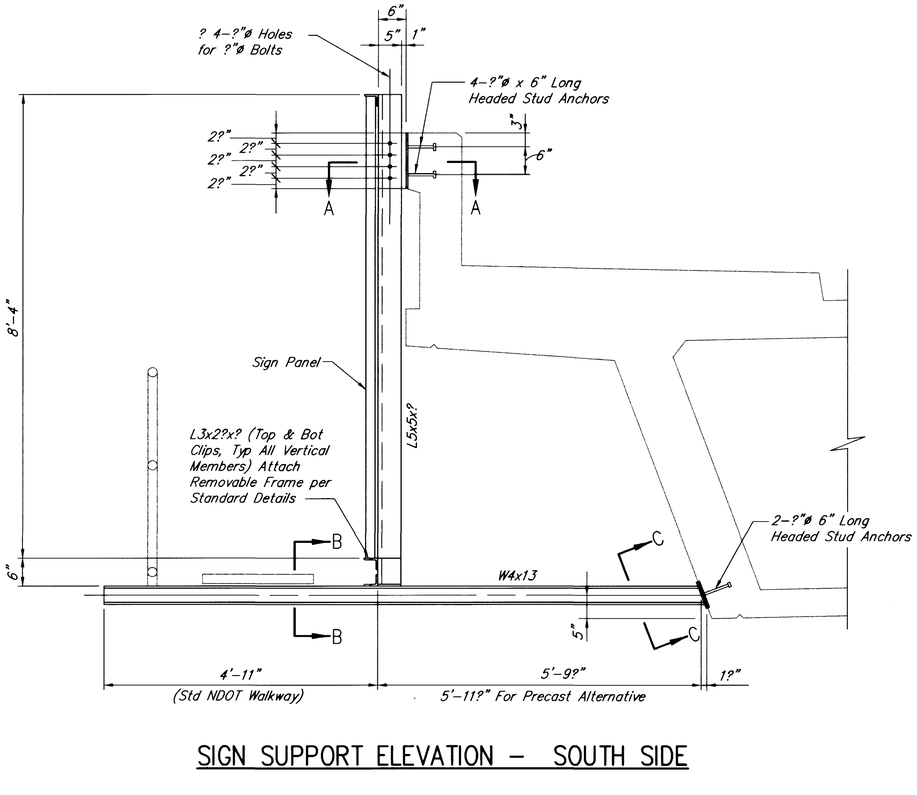

SIGN SUPPORT ELEVATION – SOUTH SIDE

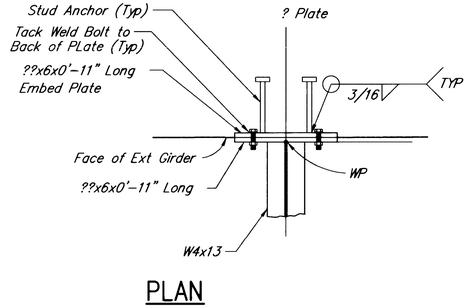

PLAN

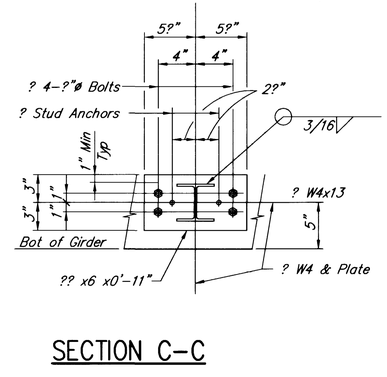

SECTION C-C

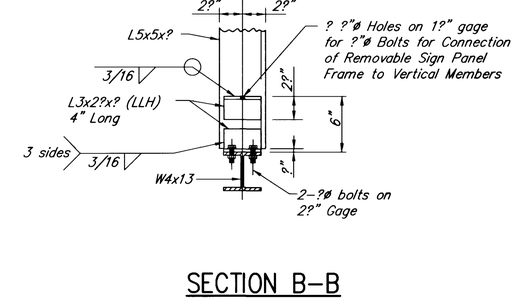

SECTION B-B

Notes:

1. See State of Nevada Department of Transportation Standard Plans 1995 for Overhead Sign Details not shown on this Drawing.
2. All bolts for Sign supports are ?"ø High Strength (ASTM A325) with hex nut, flat washer, and lock washer. All holes are ?"ø unless noted otherwise in Drawing.
3. All steel parts shall be ASTM A36.
4. All steel parts except those embedded in concrete shall be hot-dipped galvanized after fabrication. The exposed surfaces of embedded parts shall be coated with ZRC Cold Galvanizing Compound or approved equal after removal of concrete forms.
5. Contractor shall set Sign plumb and level.
6. Contractor is responsible for locating post-tensioning ducts and strands, and will take the necessary precautions not to come in contact with them.
7. Sign Support dimensions shall be field verified prior to fabrication and erection of Sign.

REV	DATE	DESCRIPTION

RECOMMENDED: BRIAN L. SCHMIDT P.E. NO. 10747 DATE 9/14/98

REGISTERED PROFESSIONAL ENGINEER BRIAN L. SCHMIDT No. 10747 STATE OF NEVADA

G.C. WALLACE, INC.
Engineering/Architecture
1555 SOUTH RAINBOW BLVD./LAS VEGAS, NEVADA 89102
(702) 365-1200

CITY OF LAS VEGAS
SUMMERLIN PARKWAY
CRESTDALE LANE OVER SUMMERLIN PARKWAY
SIGN SUPPORT PLAN, ELEVATION & SECTIONS

SHEET B-54
107V-2975
OF 177 SHEETS

SPKYB054.DWG

JOB NO. 62051.211B, 412.400

14922

173

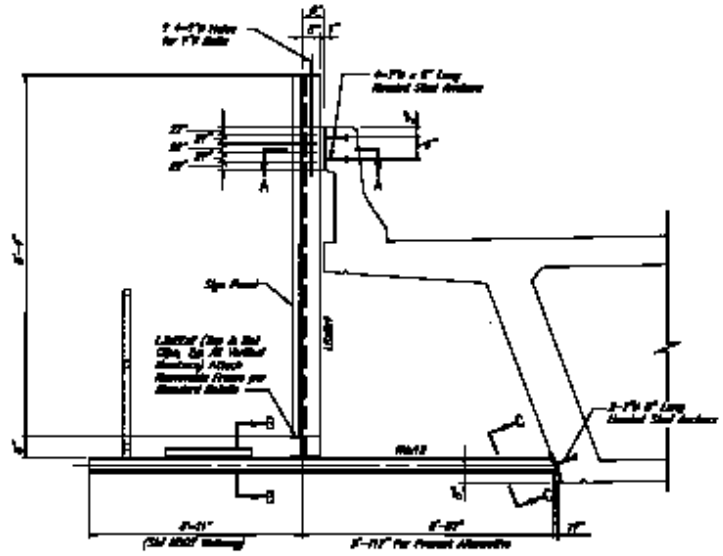

SIGN SUPPORT ELEVATION – NORTH SIDE

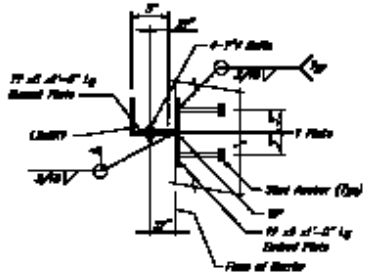

SECTION A–A

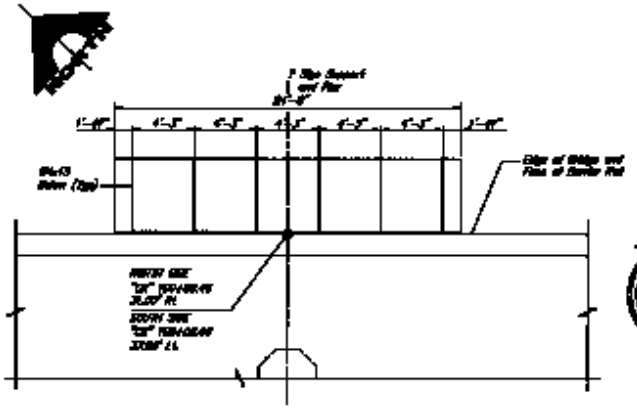

LOCATION PLAN – NORTH SIDE

Notes:

1. [illegible]
2. [illegible]
3. [illegible]
4. [illegible]
5. [illegible]
6. [illegible]
7. [illegible]

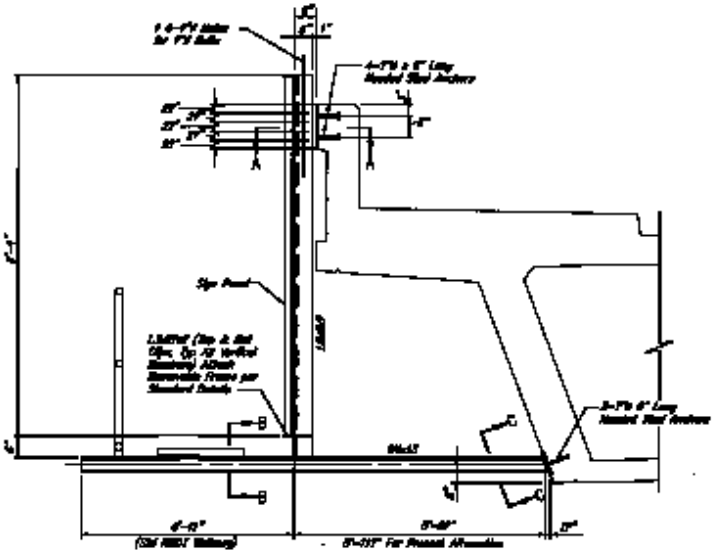

SIGN SUPPORT ELEVATION – SOUTH SIDE

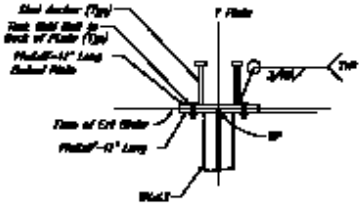

PLAN

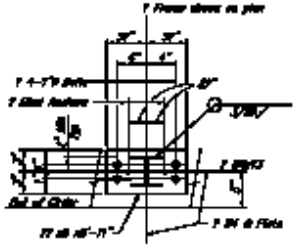

SECTION C–C

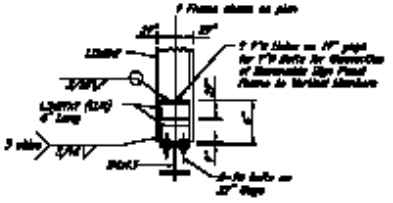

SECTION B–B

CITY OF LAS VEGAS
BANKERS PARKWAY
CROSSDALE LANE OVER BANKERS PARKWAY
SIGN SUPPORT PLAN, ELEVATION & SECTIONS

G.C. WALLACE, INC.
Engineering/Architecture

SHEET
B-64