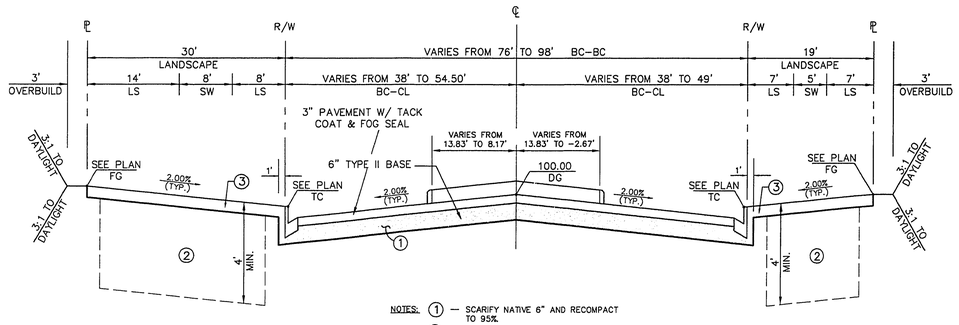


NOTES:
1. — SCARIFY NATIVE 6" AND RECOMPACT TO 95%.
2. — LANDSCAPE AREA: EXCAVATE AND RECOMPACT TO 85%, OR RIP ENTIRE AREA TO DEPTH INDICATED.
3. — ROUGH GRADE (R.G.) TO BE 4" BELOW FINISH GRADE (F.G.) FOR FUTURE LANDSCAPE PURPOSES.

## HUSITE DRIVE TYPICAL SECTION

NOT TO SCALE

F / 32

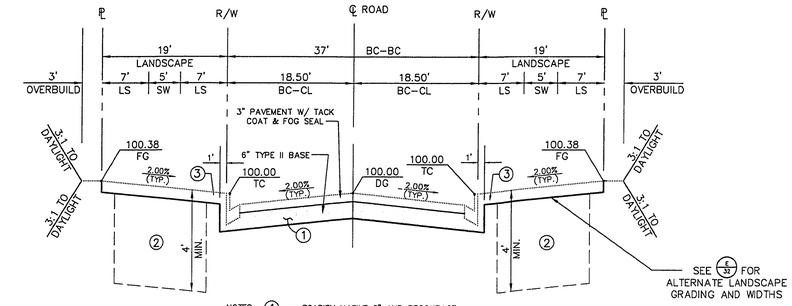


NOTES:
1. — SCARIFY NATIVE 6" AND RECOMPACT TO 95%.
2. — LANDSCAPE AREA: EXCAVATE AND RECOMPACT TO 85%, OR RIP ENTIRE AREA TO DEPTH INDICATED.
3. — ROUGH GRADE (R.G.) TO BE 4" BELOW FINISH GRADE (F.G.) FOR FUTURE LANDSCAPE PURPOSES.

## CANYON BLUFF CIRCLE TYPICAL SECTION

NOT TO SCALE

C / 32

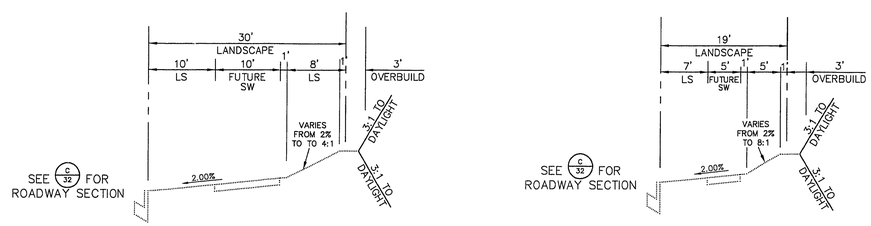


## CANYON BLUFF CIRCLE TYPICAL LANDSCAPE SECTIONS

NOT TO SCALE

E / 32

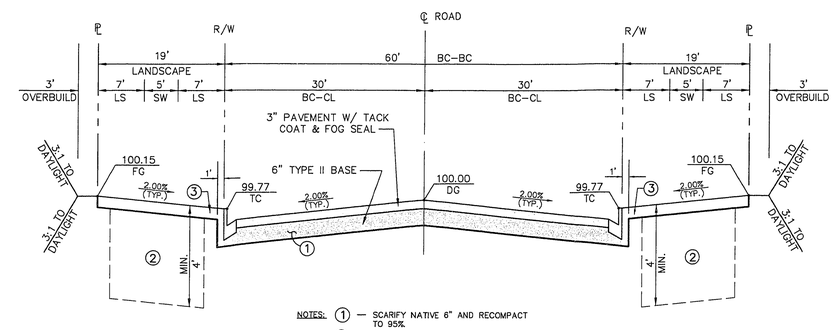


NOTES:
1. — SCARIFY NATIVE 6" AND RECOMPACT TO 95%.
2. — LANDSCAPE AREA: EXCAVATE AND RECOMPACT TO 85%, OR RIP ENTIRE AREA TO DEPTH INDICATED.
3. — ROUGH GRADE (R.G.) TO BE 4" BELOW FINISH GRADE (F.G.) FOR FUTURE LANDSCAPE PURPOSES.

## INDIGO DRIVE TYPICAL SECTION

NOT TO SCALE

B / 32

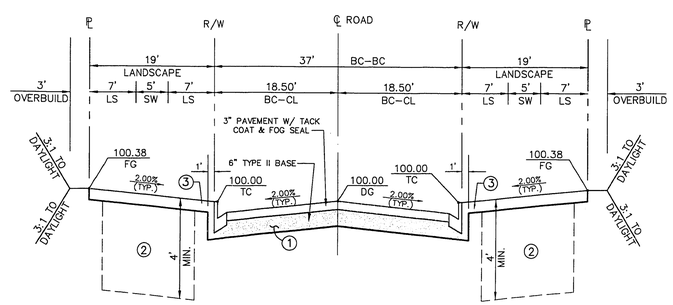


NOTES:
1. — SCARIFY NATIVE 6" AND RECOMPACT TO 95%.
2. — LANDSCAPE AREA: EXCAVATE AND RECOMPACT TO 85%, OR RIP ENTIRE AREA TO DEPTH INDICATED.
3. — ROUGH GRADE (R.G.) TO BE 4" BELOW FINISH GRADE (F.G.) FOR FUTURE LANDSCAPE PURPOSES.

## PALO BREA ROAD TYPICAL SECTION

NOT TO SCALE

D / 32

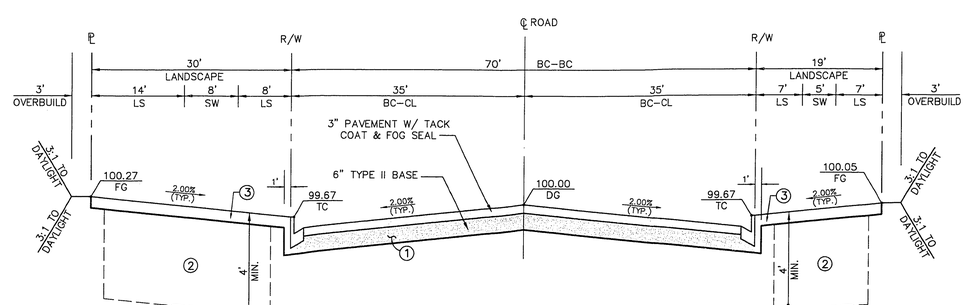


NOTES:
1. — SCARIFY NATIVE 6" AND RECOMPACT TO 95%.
2. — LANDSCAPE AREA: EXCAVATE AND RECOMPACT TO 85%, OR RIP ENTIRE AREA TO DEPTH INDICATED.
3. — ROUGH GRADE (R.G.) TO BE 4" BELOW FINISH GRADE (F.G.) FOR FUTURE LANDSCAPE PURPOSES.

## HUSITE DRIVE TYPICAL SECTION

NOT TO SCALE

A / 32

| REV. | DATE | DESCRIPTION | DATE | AGEN. APP. | DATE | CCW APP. |
|---|---|---|---|---|---|---|
| | | | | | | |

RECOMMENDED BERT A. HUGHES
P.E. NO. 10259 DATE

ENGINEER - STATE OF NEVADA - BERT A. HUGHES - 10259 - REGISTERED PROFESSIONAL

100% SUBMITTAL 02-05-97

G.C. WALLACE, INC.
Engineering/Architecture
1555 SOUTH RAINBOW BLVD., LAS VEGAS, NEVADA 89102 (702) 363-1200
SUMMERLIN DIVISION (702) 363-0991

SUMMERLIN
VILLAGE 12 UNIT 2C IMPROVEMENTS
MISC. SECTIONS

SHEET 32
SHT 32 OF 41

JOB NO. 62011.214

C:\DWG\VIL12\UNIT-2C\IMPROV96\12C-X32 Thu Feb 27 11:51:35 1997 by A.D.R.

11-31-72 107Y-4463-2C