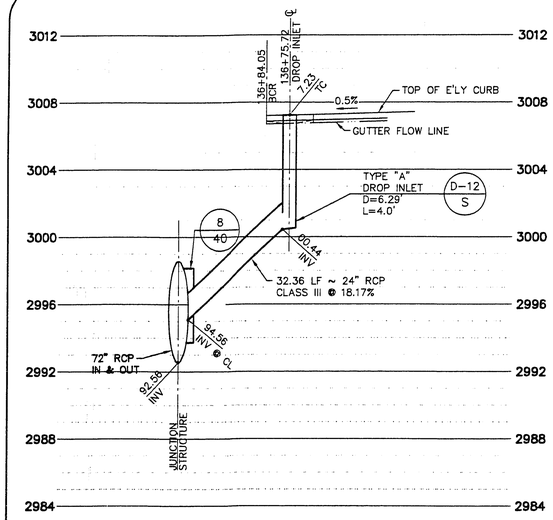

137+09.29, 30.85' RT - JUNCTION STRUCTURE
136+75.72 DI (RT)
LATERAL PROFILE

LAUREL GLEN DRIVE
SCALE HORIZ. 1"=20'
VERT. 1"=4'
5 / 32

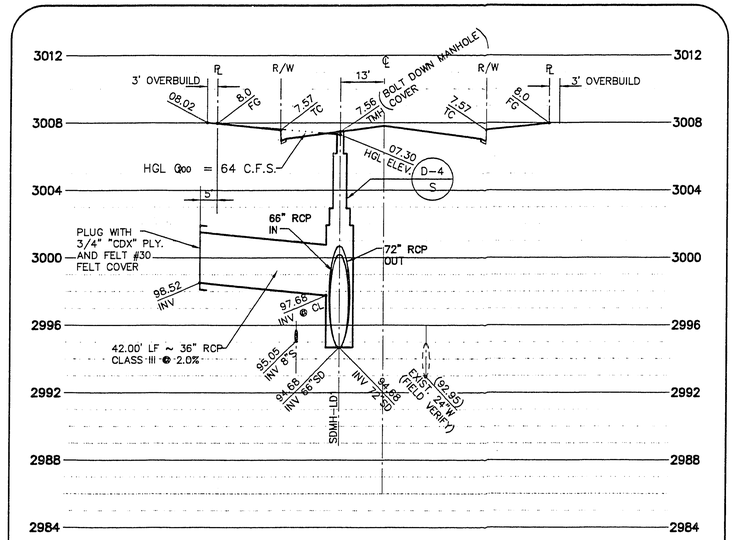

136+06 SDMH-LD1
LATERAL PROFILE

LAUREL GLEN DRIVE
SCALE HORIZ. 1"=20'
VERT. 1"=4'
4 / 32

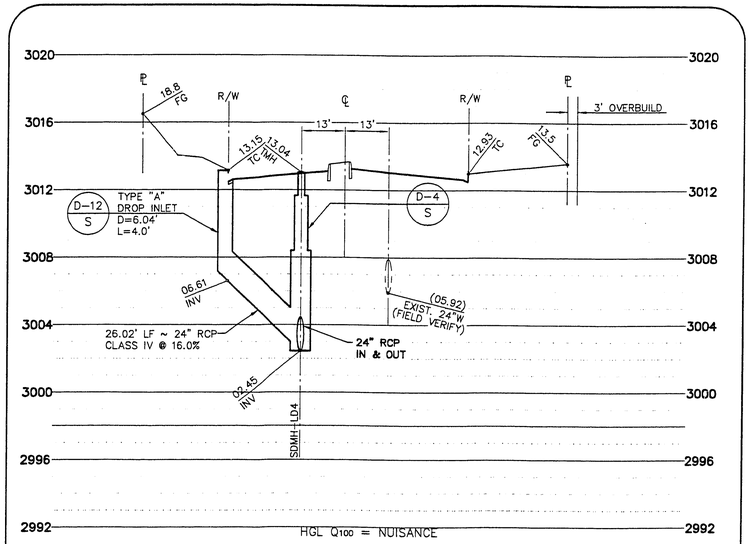

125+10.00 SDMH-LD4
124+99.77 LT
LATERAL PROFILE

LAUREL GLEN DRIVE
SCALE HORIZ. 1"=20'
VERT. 1"=4'
2 / 32

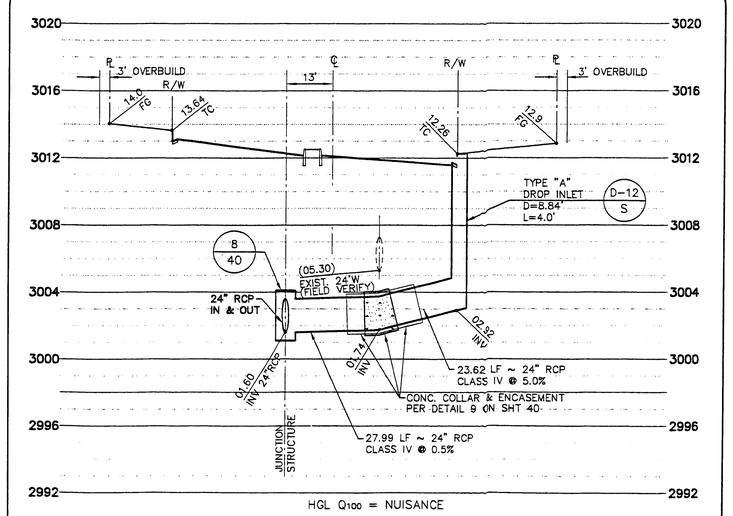

126+63.15 - JUNCTION STRUCTURE
126+43.60 DI (RT)
LATERAL PROFILE

LAUREL GLEN DRIVE
SCALE HORIZ. 1"=20'
VERT. 1"=4'
3 / 32

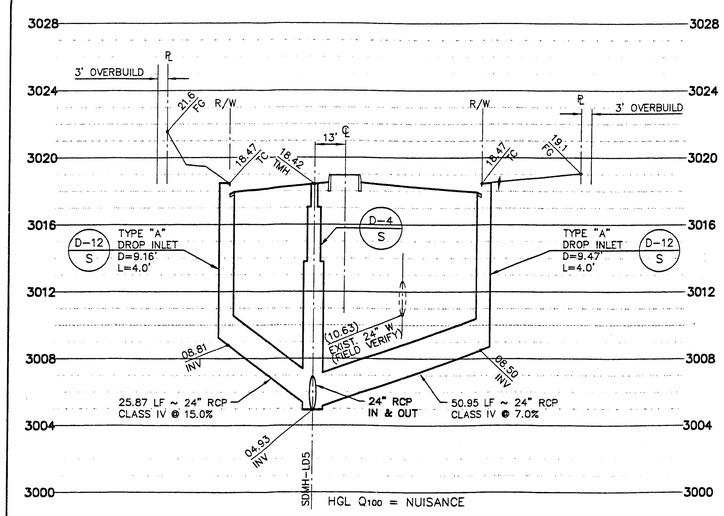

120+60.00 SDMH-LD5
120+50.33 DI (RT & LT)
LATERAL PROFILE

LAUREL GLEN DRIVE
SCALE HORIZ. 1"=20'
VERT. 1"=4'
1 / 32

APPROVED FOR CONSTRUCTION

Gregory L. Rodwick 9/13/96
LVWWD DATE

FINAL SUBMITTAL

REV.	DATE	DESCRIPTION	DATE	APPROVAL

RECOMMENDED
CHRISTOPHER W. ANDERSON
5071
R.P.E. NO.
DATE

REGISTERED PROFESSIONAL ENGINEER STATE OF NEVADA
CHRISTOPHER W. ANDERSON
5071

G.C. WALLACE, INC.
Engineering/Architecture 1555 SOUTH RAINBOW BLVD./LAS VEGAS, NEVADA 89102

SUMMERLIN
VILLAGE 11/12 THE ARBORS - UNIT 2B
LAUREL GLEN DRIVE
STORM DRAIN LATERALS

SHEET
32
SHT 32 OF 46

JOB NO. 62011.213
September 06, 1996 4:15:56 p.m. Drawing: C:\DWG\11-12\2B\IMPROV\SD-LA11.DWG
AMA 62011.213

S.I.D.707 PROJECT NO. 14A,14B,14C,15A,15B,15C,18A,18B,18C,19A,19B,19C,20A,20B,20C,&52 11-32-113 3274-4463-2B