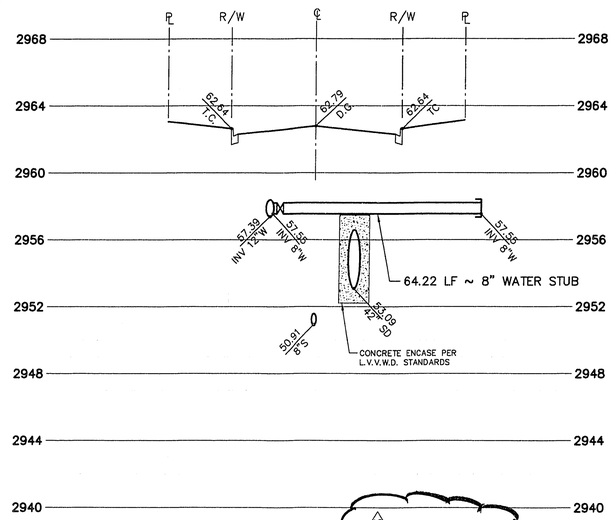

NOTE: THIS DETAIL IS ADDED

14+20.00
LATERAL PROFILE

ARBORDALE PLACE

SCALE HORIZ. 1"=20'
VERT. 1"=4'

F / 55

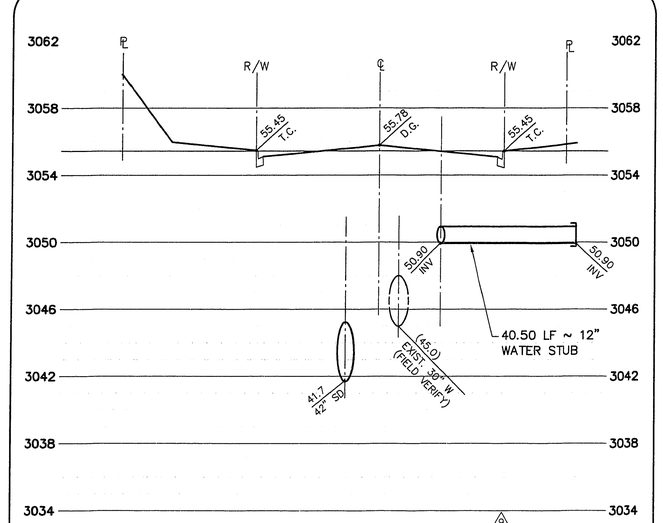

NOTE: THIS DETAIL IS ADDED

165+29.50
LATERAL PROFILE

HUSITE DRIVE

SCALE HORIZ. 1"=20'
VERT. 1"=4'

D / 55

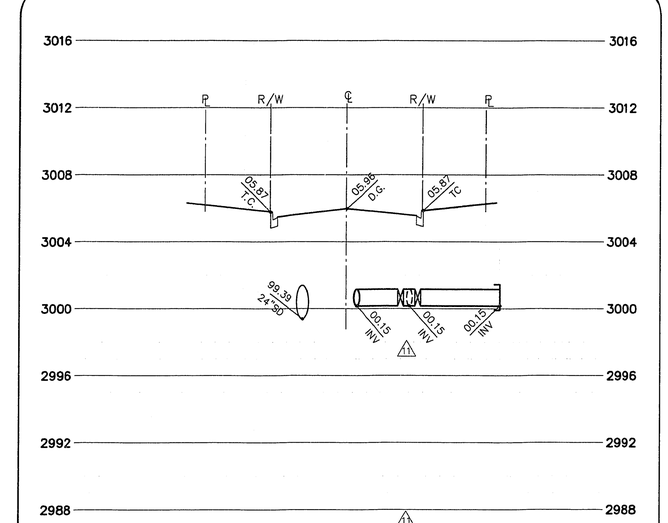

NOTE: THIS DETAIL IS REVISED

19+86.00
LATERAL PROFILE

GREENMOOR LANE

SCALE HORIZ. 1"=20'
VERT. 1"=4'

B / 55

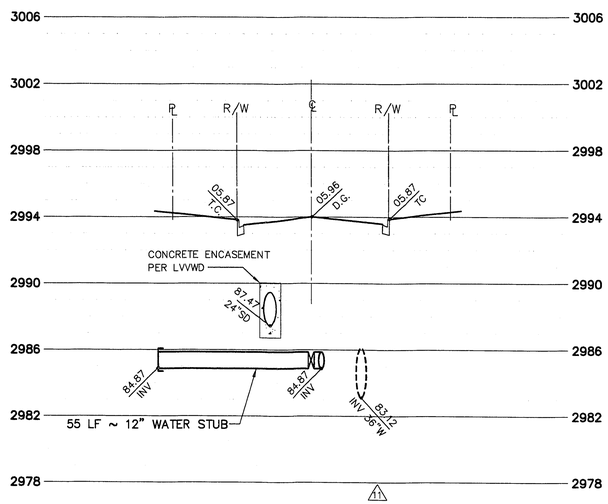

NOTE: THIS DETAIL IS ADDED

23+70.25
LATERAL PROFILE

GREENMOOR LANE

SCALE HORIZ. 1"=20'
VERT. 1"=4'

E / 55

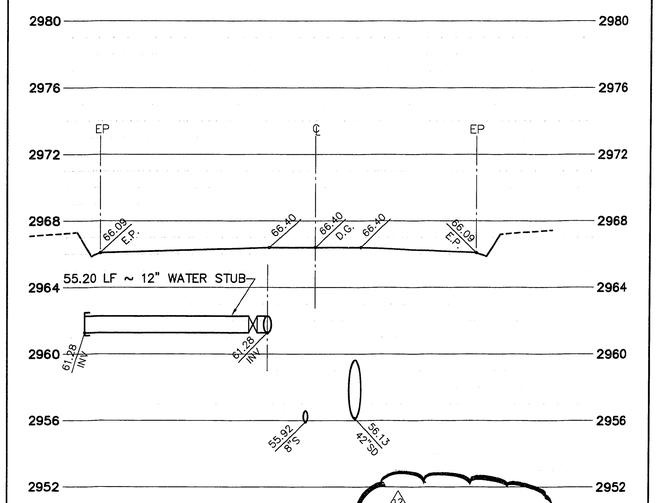

NOTE: THIS DETAIL IS REVISED

12+90.28
LATERAL PROFILE

ARBORDALE PLACE

SCALE HORIZ. 1"=20'
VERT. 1"=4'

C / 55

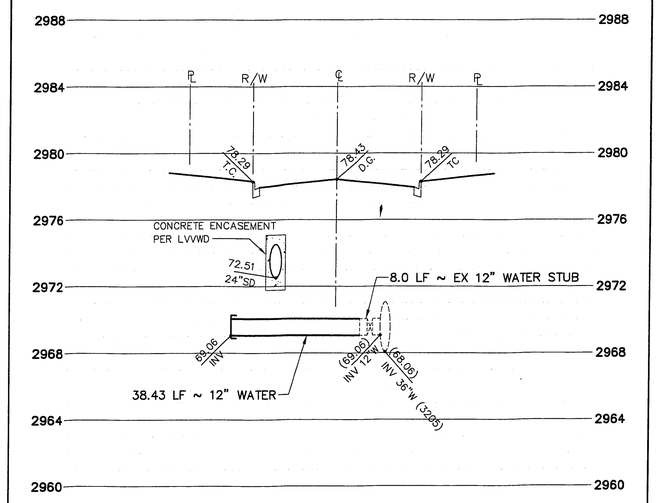

31+00.21
LATERAL PROFILE

GREENMOOR LANE

SCALE HORIZ. 1"=20'
VERT. 1"=4'

A / 55

APPROVED FOR CONSTRUCTION ESN.018
Firsts Approval 5/29/96
12.4.96
LAS VEGAS VALLEY WATER DISTRICT DATE

REV.	DATE	DESCRIPTION	APPROVAL
1	9/6/96	MOVE 12" WATER STUB TO PARCEL E FROM STA 19+86.00 TO 23+70.25	9/9/96
2	8/23/96	REVISED WATER STUB TO PARCEL ES-2 FROM STA 165+72.88 TO 165+29.50 AND DELETED 8" SEWER STUB	12/5/96
3	11/25/96	MODIFY 12" WATER STUBS TO PARCELS A-1 AND A-2	11/25/96

RECOMMENDED
CHRISTOPHER W. ANDERSON
R.P.E. NO. 5071

STATE OF NEVADA
CHRISTOPHER W. ANDERSON
No. 5071
REGISTERED PROFESSIONAL ENGINEER

FINAL SUBMITTAL

G.C. WALLACE, INC.
Engineering/Architecture 1555 SOUTH RAINBOW BLVD./LAS VEGAS, NEVADA 89102

SUMMERLIN
VILLAGE 11/12 THE ARBORS - UNIT 2A
HUSITE DRIVE, GREENMOOR LANE, AND ARBORDALE PLACE WATER LATERALS

SHEET **55**
SHT 55 OF 64

JOB NO. 62011.212
November 27, 1996 4:08:07 a.m. Drawing: C:\DWG\VIL11-12\2A\DETAILS\1712A-L55.DWG

S.I.D. 707 PROJECT NO. 10A,10B,10C,11A,11B,11C,12A,12B,12C,13A,13B,13C,17A,17B,17C,21, & 53 11-32-179

567Y-4463-2A