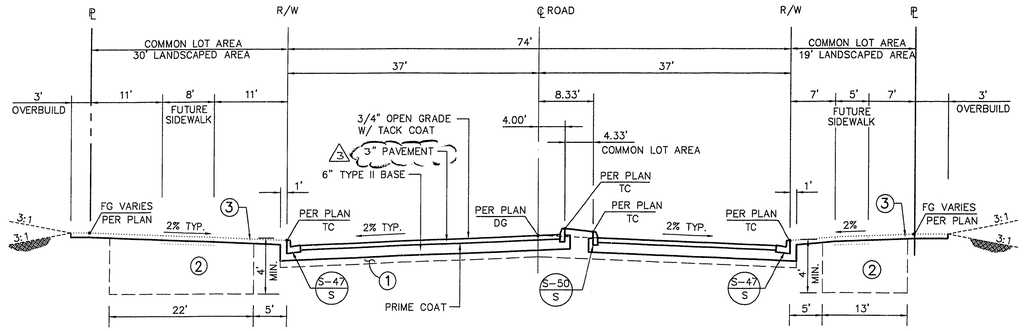

STA 107+38.93 TO 108+39.33

SAGEBERRY DRIVE TYPICAL SECTION

SCALE: HORIZ. 1"=10'
VERT. 1"=5'

F 57

NOTES:
1. SCARIFY NATIVE 6" AND RECOMPACT TO 95%.
2. LANDSCAPE AREA: EXCAVATED AND RECOMPACT TO 85%, OR RIP ENTIRE AREA TO DEPTH INDICATED.
3. ROUGH GRADE (R.G.) TO BE 4" BELOW FINISH GRADE (F.G.) FOR FUTURE LANDSCAPE PURPOSES.

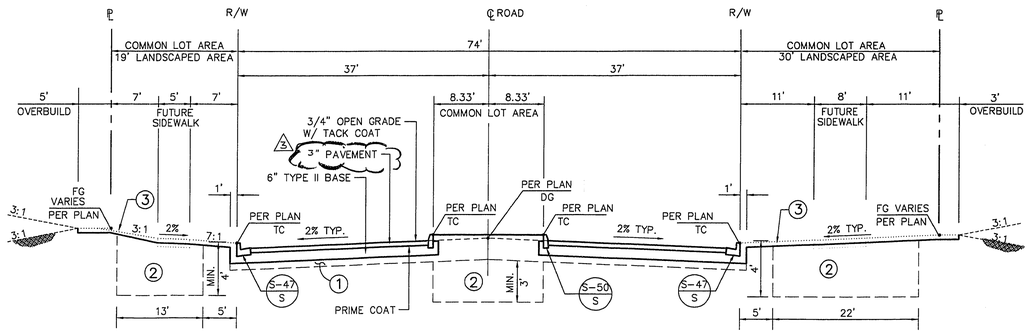

STA 102+77.16 TO 104+42.61
STA 109+96.40 TO 111+41.64
STA 114+82.22 TO 118+00.00

LAURELGLEN DRIVE TYPICAL SECTION

SCALE: HORIZ. 1"=10'
VERT. 1"=5'

C 57

NOTES:
1. SCARIFY NATIVE 6" AND RECOMPACT TO 95%.
2. LANDSCAPE AREA: EXCAVATED AND RECOMPACT TO 85%, OR RIP ENTIRE AREA TO DEPTH INDICATED.
3. ROUGH GRADE (R.G.) TO BE 4" BELOW FINISH GRADE (F.G.) FOR FUTURE LANDSCAPE PURPOSES.

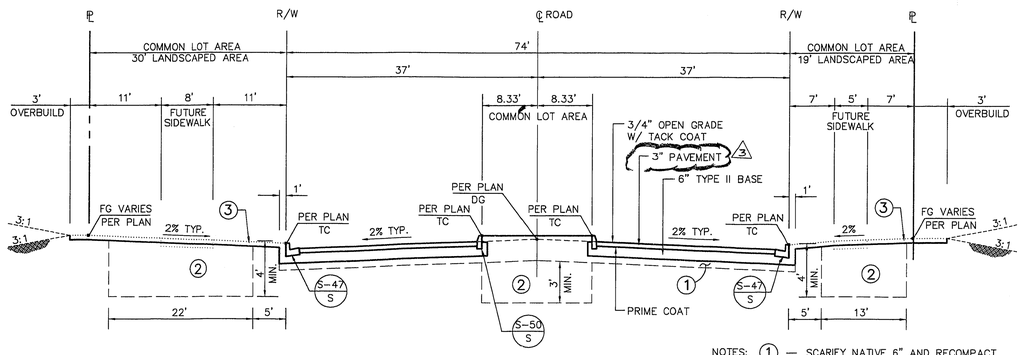

STA 100+94.04 TO 105+83.25

SAGEBERRY DRIVE TYPICAL SECTION

SCALE: HORIZ. 1"=10'
VERT. 1"=5'

E 57

NOTES:
1. SCARIFY NATIVE 6" AND RECOMPACT TO 95%.
2. LANDSCAPE AREA: EXCAVATED AND RECOMPACT TO 85%, OR RIP ENTIRE AREA TO DEPTH INDICATED.
3. ROUGH GRADE (R.G.) TO BE 4" BELOW FINISH GRADE (F.G.) FOR FUTURE LANDSCAPE PURPOSES.

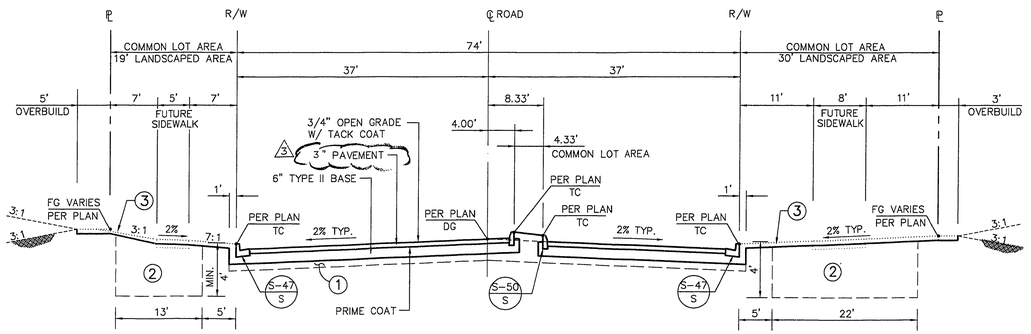

STA 100+50.57 TO 101+50.17
STA 107+69.81 TO 108+69.41
STA 112+61.19 TO 113+61.19

LAURELGLEN DRIVE TYPICAL SECTION

SCALE: HORIZ. 1"=10'
VERT. 1"=5'

B 57

NOTES:
1. SCARIFY NATIVE 6" AND RECOMPACT TO 95%.
2. LANDSCAPE AREA: EXCAVATED AND RECOMPACT TO 85%, OR RIP ENTIRE AREA TO DEPTH INDICATED.
3. ROUGH GRADE (R.G.) TO BE 4" BELOW FINISH GRADE (F.G.) FOR FUTURE LANDSCAPE PURPOSES.

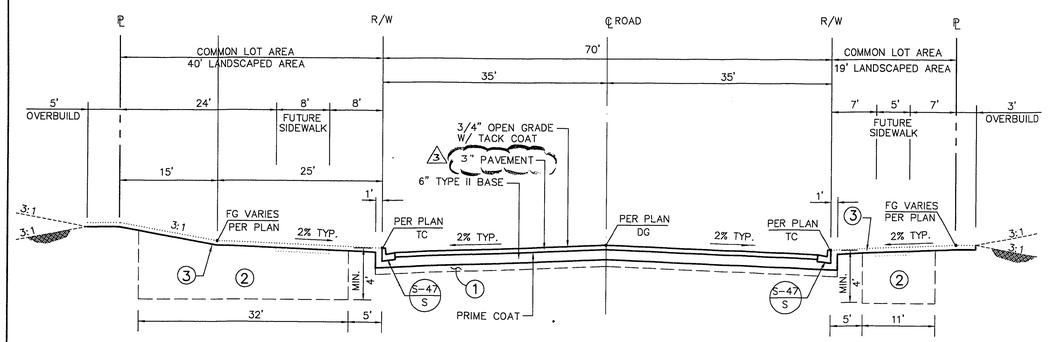

STA 142+42.46 TO 176+53.14

HUSITE DRIVE TYPICAL SECTION

SCALE: HORIZ. 1"=10'
VERT. 1"=5'

D 57

NOTES:
1. SCARIFY NATIVE 6" AND RECOMPACT TO 95%.
2. LANDSCAPE AREA: EXCAVATED AND RECOMPACT TO 85%, OR RIP ENTIRE AREA TO DEPTH INDICATED.
3. ROUGH GRADE (R.G.) TO BE 4" BELOW FINISH GRADE (F.G.) FOR FUTURE LANDSCAPE PURPOSES.

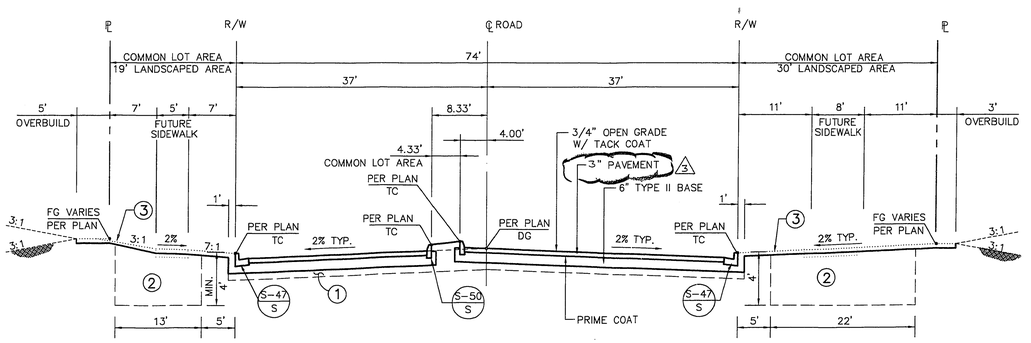

STA 105+69.00 TO 106+69.40

LAURELGLEN DRIVE TYPICAL SECTION

SCALE: HORIZ. 1"=10'
VERT. 1"=5'

A 57

NOTES:
1. SCARIFY NATIVE 6" AND RECOMPACT TO 95%.
2. LANDSCAPE AREA: EXCAVATED AND RECOMPACT TO 85%, OR RIP ENTIRE AREA TO DEPTH INDICATED.
3. ROUGH GRADE (R.G.) TO BE 4" BELOW FINISH GRADE (F.G.) FOR FUTURE LANDSCAPE PURPOSES.

REV.	DATE	DESCRIPTION	APPROVAL
A	07/03/96	REV. AC PVMT. FROM 2" TO 3"	7/10/96

FINAL SUBMITTAL

RECOMMENDED
CHRISTOPHER W. ANDERSON
5071
R.P.E. NO.
DATE

REGISTERED PROFESSIONAL ENGINEER STATE OF NEVADA CHRISTOPHER W. ANDERSON CIVIL 5071

G.C. WALLACE, INC.
Engineering/Architecture 1555 SOUTH RAINBOW BLVD.-LAS VEGAS, NEVADA 89146

SUMMERLIN
VILLAGE 11/12 THE ARBORS - UNIT 2A
SAGEBERRY DRIVE, LAURELGLEN DRIVE AND HUSITE DRIVE
TYPICAL SECTIONS

SHEET 57
SHT 57 OF 64

JOB NO. 62011.212
Drawing: C:\DWG\11-12\2A-11008\112A-S57.DWG
May 22, 1996 10:18:16 a.m.

11-32-191

107Y-4463-2A