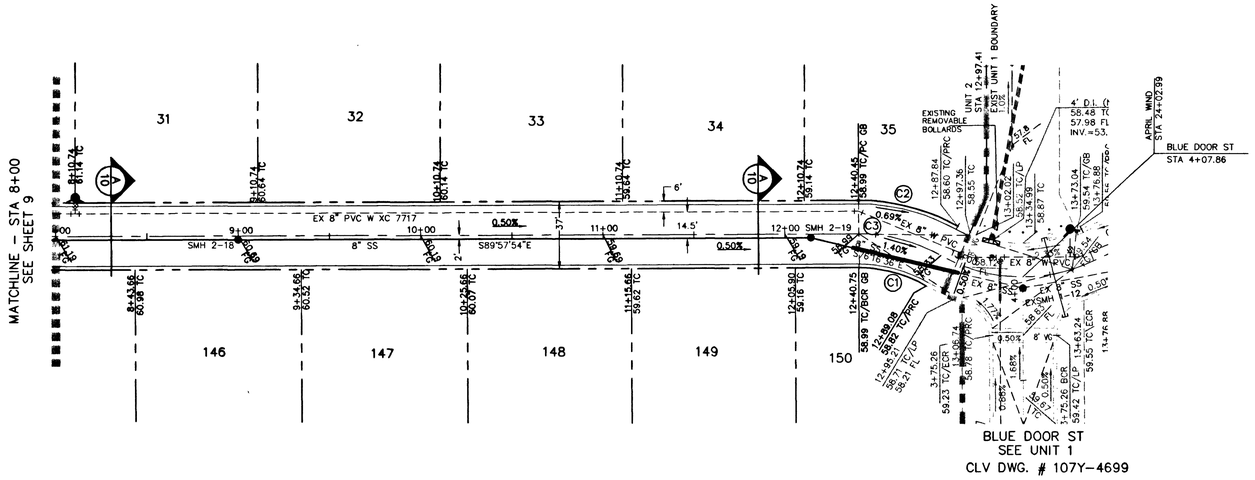

APRIL WIND AVENUE (PRIVATE)

PLAN

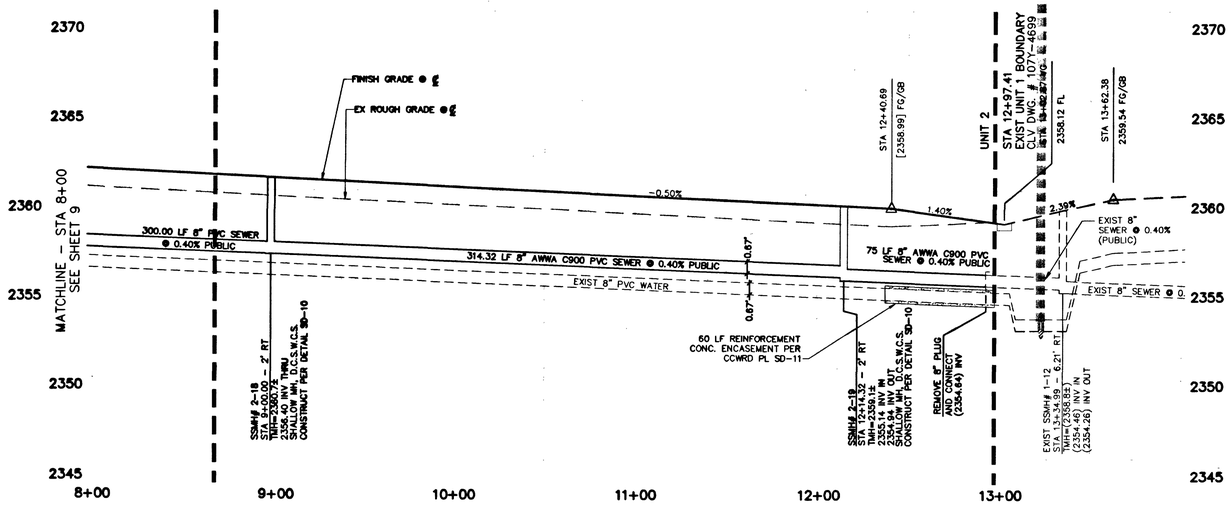

PROFILE

SCALE: HORIZ. 1" = 40'
VERT. 1" = 4'

PRIVATE STREET NOTE

NOTE: ALL PRIVATE STREETS ARE PUBLIC DRAINAGE EASEMENTS, CLV SEWER AND PUE EASEMENTS TO BE PRIVATELY MAINTAINED BY THE HOME OWNERS ASSOCIATION.

CURVE TABLE				
CURVE	RADIUS	DELTA	LENGTH	TANGENT
C1	71.50	31°10'45"	38.91	19.95
C2	108.50	30°01'06"	56.85	29.09
C3	90.00	30°01'06"	47.15	24.13

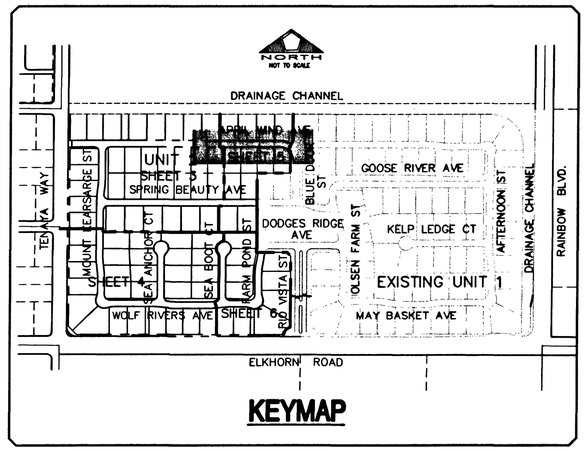

KEYMAP

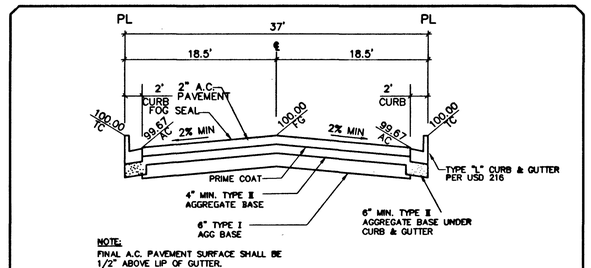

NOTE:
FINAL A.C. PAVEMENT SURFACE SHALL BE 1/2" ABOVE LIP OF GUTTER.

TYPICAL INTERIOR ROAD SECTION (PRIVATE)

NOT TO SCALE

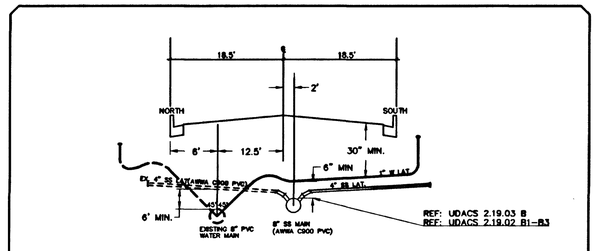

A/10 TYPICAL SEWER & WATER SECTION–APRIL WIND AVE.

NOT TO SCALE

BENCHMARK

CITY OF LAS VEGAS BENCHMARK NO. 1LV90 11SWS. RIVET AND PLATE IN TOP OF CURB, SOUTHEAST CORNER OF RAINBOW BLVD AND FLANAGAN DRIVE.

ELEVATION = 724.3103 METERS
(NAVD '88 PUBLISHED)
ELEVATION = 2376.34 U.S. SURVEY FEET
(NAVD '88 CALCULATED)
PROJECT ELEVATION = 2376.52 U.S. SURVEY FEET

BASIS OF BEARING

THE BASIS OF BEARING FOR THIS SURVEY IS THE WEST LINE OF THE SOUTHEAST QUARTER (SE 1/4) OF SECTION 15, TOWNSHIP 19 SOUTH, RANGE 60 EAST, M.D.M., CLARK COUNTY, NEVADA, AS SHOWN IN FILE 115, PAGE 13 OF OFFICIAL RECORDS, CLARK COUNTY, NEVADA. I.E. NORTH 00°11'55" EAST

NORTH
SCALE: 1"=40'

GRAPHIC SCALE

40 0 20 40 80 160
(IN FEET)
1 inch = 40 ft.

APPROVED FOR CONSTRUCTION

LAS VEGAS VALLEY WATER DISTRICT — 7/18/03 DATE ESN.018

Avoid hitting overhead power lines. It's costly.
Call before you do Overhead
1-702-593-6111

Avoid cutting underground utility lines. It's costly.
Call before you Dig.
1-800-227-2600
WASHINGTON SERVICE ALERT (SAA)

NO.	DESCRIPTION	DATE	APP'D

DATE : 7/2/2003
PM : S.L.Y.
DRAWN BY : D.L.
DESIGNED BY : R.P.S.
CHECKED BY : R.W.C.
ADA CHECKED :
JOB NO. : 88147028
SCALE : 1"=40'

Copyright Reserved
The Contractor is solely responsible for all dimensions. DO NOT scale the drawing - any omissions shall be reported to Stantec without delay. The Copyrights to all designs and drawings on this property are Stantec's. Reproduction or use for any purpose other than that authorized by Stantec is prohibited.

Stantec Consulting Inc.
7251 West Charleston Blvd
Las Vegas NV U.S.A.
89117
Tel. 702.258.0115
Fax. 702.258.4956
www.stantec.com
Stantec

Pulte
1635 VILLAGE CENTER CIRCLE, SUITE 250
LAS VEGAS, NEVADA 89134
(702) 256-7900

PULTE HOMES
WYETH RANCH UNIT 2
APRIL WIND AVENUE
STA 8+00 TO STA 12+97.14
PLAN AND PROFILE

PROFESSIONAL ENGINEER – STATE OF NEVADA
RICHARD W. COMMODORE
Exp. 12-31-03
CIVIL
5447
7-2-03

SHEET 10 OF 20

10744699-2

54893 55558

W:\Active\88147028\Drawings\unit 2 plans\02-ppl.dwg patrow Wed, 02 Jul 2003 - 8:48am