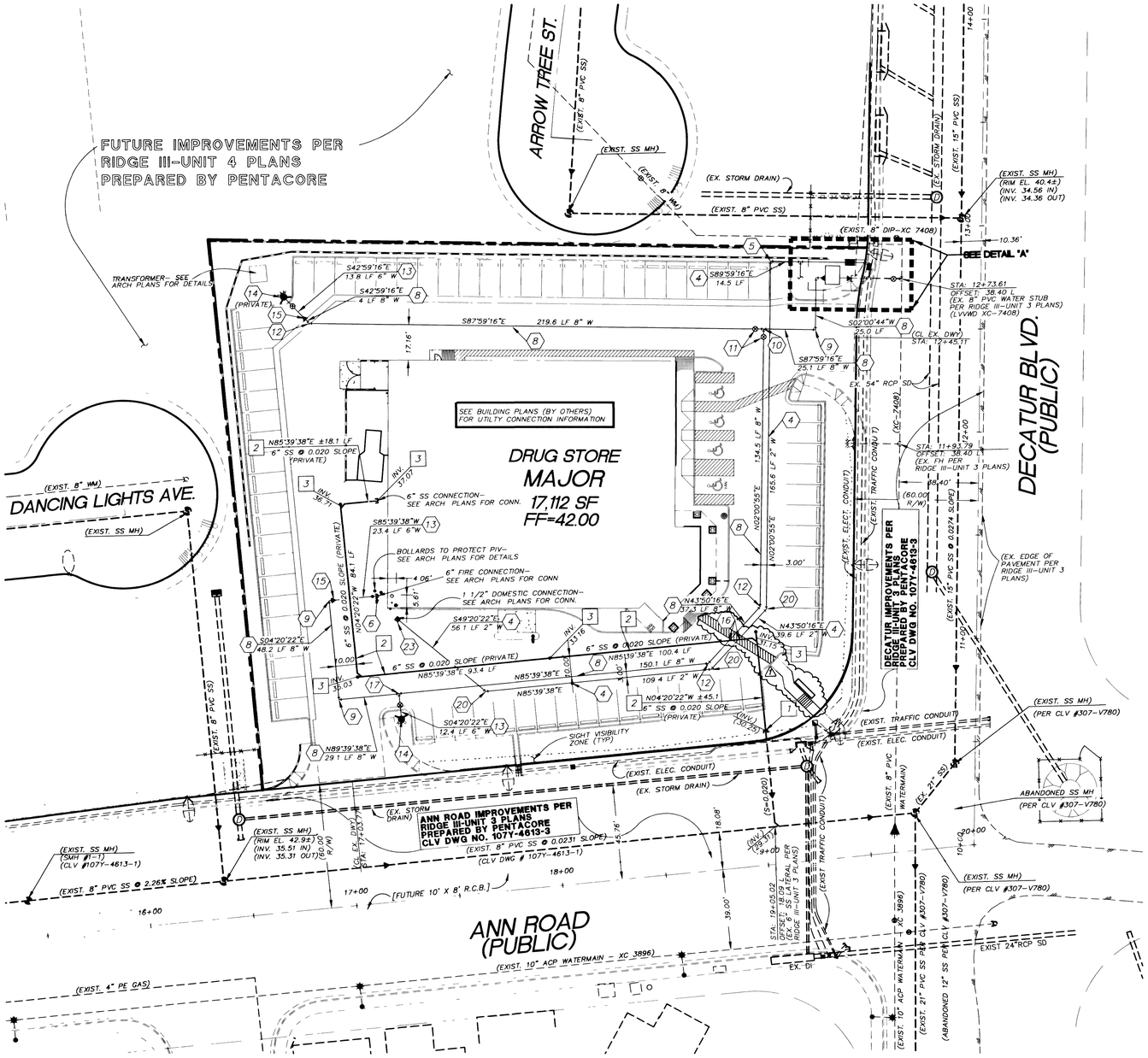

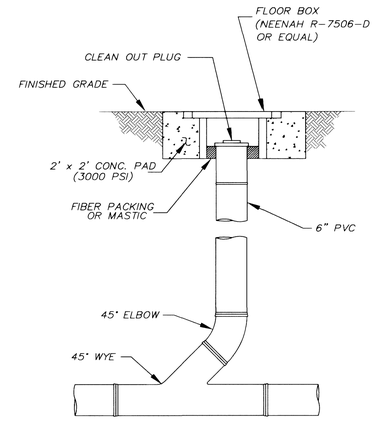

CLEAN OUT DETAIL
NOT TO SCALE
1
C4

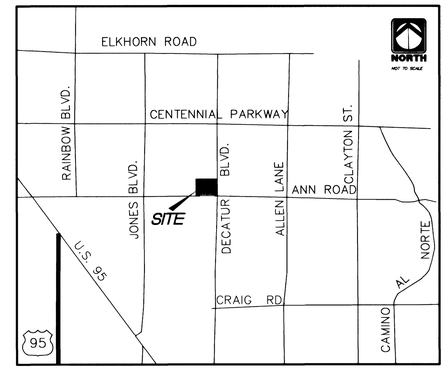

VICINITY MAP

NORTH

GRAPHIC SCALE

30 0 15 30 60 120

(IN FEET)
1 inch = 30 ft.

FIRE FLOW DATA

	SAV-ON
REQUIRED FIRE FLOW:	1,750 GPM
SQUARE FOOTAGE:	17,112
LARGEST AREA BETWEEN 4-HR AREA SEPARATION WALLS:	N/A
BUILDING HEIGHT:	37'
NUMBER OF STORIES:	1
OCCUPANCY:	M
FULL AUTOMATIC FIRE SYSTEM:	YES
TYPE OF CONSTRUCTION:	TYPE V-N

LAS VEGAS FIRE DEPARTMENT

FIRE FLOW REQUIREMENT IS: 1750 GPM AT 20 PSI RESIDUAL PRESSURE.

FIRE MARSHAL 11/7/01 DATE

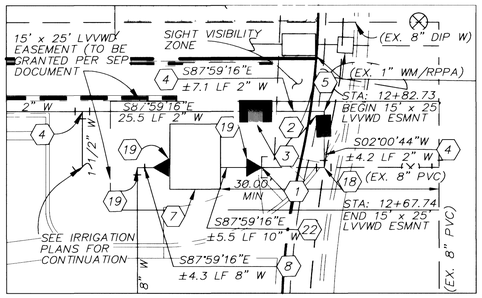

DETAIL "A"
SCALE: 1" = 10'

WATER NOTES

No.	ITEM
1	REMOVE EX. CAP AND BLOW-OFF AND CONNECT TO EX. WATERLINE (NOTE: VALVE MUST BE IN THE CLOSED POSITION PRIOR TO REMOVING CAP
2	INSTALL 2" METER PER UDACS STD PLATE NO. 1D
3	INSTALL 2" R.P.P.A. PER UDACS STD PLATE NO. 11A
4	INSTALL 2" WATERLINE PER CLV & LVVWD STANDARDS
5	INSTALL 2" 90° BEND
6	INSTALL POST INDICATOR VALVE A MINIMUM OF 5' FROM THE BUILDING
7	INSTALL 10" DOUBLE CHECK DETECTOR ASSEMBLY PER UDACS STD. PLATE NO. 20B
8	INSTALL 8" WATERLINE (PVC, C-900 CL 150) PER UDACS PLATE NO. 6A (UNPAVED)
9	INSTALL 8" 90° BEND
10	INSTALL 8" x 8" TEE
11	INSTALL 8" GATE VALVE PER UDACS PLATE NO. 8
12	INSTALL 8" 45° BEND
13	INSTALL 6" WATER LINE PER CLV & LVVWD STANDARDS
14	INSTALL FIRE HYDRANT INCLUDING GATE VALVE - INSTALLATION PER UDACS PLATE NO. 7
15	INSTALL 8" x 6" REDUCER (WITH ANCHOR BLOCK PER UCACS PLATE NO 3)
16	SEWER MAINS SHALL BE PLACED BELOW WATER MAINS AND SHALL BE SEPARATED VERTICALLY BY AT LEAST 18" BETWEEN EXTERIOR PIPE WALL
17	INSTALL 8" x 6" TEE
18	INSTALL 8" x 2" SERVICE SADDLE WITH 2" TYPE K COPPER
19	INSTALL 10" x 8" REDUCER
20	INSTALL 2" 45° BEND
21	INSTALL 1 1/2" CORP STOP AND 1 1/2" WATER LATERAL FOR IRRIGATION CONNECTION
22	INSTALL 10" PVC WATERLINE PER CLV & LVVWD STANDARDS
23	INSTALL 2" x 1 1/2" REDUCER

SEWER NOTES

No.	ITEM
1	REMOVE EXISTING PLUG CAP AND CONNECT
2	INSTALL 6" DIA. PVC SDR-36 "PRIVATE" SEWER LATERAL
3	INSTALL CLEANOUTS IN PAVED AREAS WITH CONCRETE COLLARS, TRAFFIC BEARING LIDS AND VAVLE BOXES PER DETAIL 1-THIS SHEET

QUANTITIES

SEE SHEET C3 FOR QUANTITIES

CONSTRUCTION NOTE

ALL EXISTING UTILITY STRUCTURES WITHIN CONSTRUCTION AREA SHALL BE ADJUSTED TO MATCH FINISH GRADE (I.E. WV, BOX, WMH, ANNODE BOX, FH, TEL BOX, ETC.)

SEWER CONTRIBUTION

AVERAGE FLOW = 0.002 MGD
PEAK FLOW = 0.006 MGD

BENCHMARK

CITY OF LAS VEGAS BENCHMARK: 1LV90 36NES

RIVET AND PLATE IN TOP OF CURB, SOUTHWEST CORNER OF ANN ROAD AND DECATUR BOULEVARD.

ELEVATION = 681.3028 METERS (NAVD 88)
= 2235.24 FEET (NAVD 88)

BASIS OF BEARINGS

NORTH 85°39'38" EAST, BEING THE BEARING OF THE CENTERLINE OF ANN ROAD BETWEEN BRADLEY ROAD AND DECATUR BOULEVARD AS SHOWN ON THAT CERTAIN MAP ON FILE IN THE CLARK COUNTY RECORDER'S OFFICE IN FILE 57 OF SURVEYS, AT PAGE 05.

36124 31752

PROJECT NAME: SAV-ON - NWC ANN & Decatur - P.C. C-4
This project water plan complies with the Las Vegas Valley Water District's technical requirements. However, this water plan is

NOT APPROVED FOR CONSTRUCTION

at this time and this signature does not provide or imply a water commitment.

LVVWD #52 11/07/01 DATE

LEGAL DESCRIPTION

A PORTION OF THE SOUTHEAST QUARTER (SE 1/4) OF THE SOUTHEAST QUARTER (SE 1/4) OF SECTION 25, TOWNSHIP 19 SOUTH, RANGE 60 EAST, MDM, CITY OF LAS VEGAS, COUNTY OF CLARK, STATE OF NEVADA.

(CONTAINING 1.7178 ACRES, MORE OR LESS)

REDUCED PRESSURE PRINCIPLE ASSEMBLY- (1) 2" RPPA

APPROVED REDUCED PRESSURE PRINCIPLE ASSEMBLY(S) SHALL BE INSTALLED PER THE UDACS PLATE NO. 11A. NO WATER SHALL BE TAKEN FROM A SERVICE REQUIRING BACKFLOW PREVENTION UNTIL THE REDUCED PRESSURE PRINCIPLE ASSEMBLY HAS BEEN SUCCESSFULLY TESTED BY THE LVVWD

ANY BLOCK WALL OR OTHER FENCE MATERIAL SHALL BE DESIGNED AND CUNSTRUCTED AROUND THE OUTSIDE OF THE EASEMENT(S) TO ALLOW THE DISTRICT DIRECT ACCESS FROM THE ADJACENT RIGHT-OF-WAY.

INSTALLATION OF DOUBLE CHECK DETECTOR ASSEMBLY- (1) 10" DCDA

THE DOUBLE CHECK DETECTOR ASSEMBLIES SHALL BE INSTALLED IN ACCORDANCE WITH THE UDACS PLATE 20B.

ANY BLOCK WALL OR OTHER FENCE MATERIAL SHALL BE DESIGNED AND CONSTRUCTED AROUND THE OUTSIDE OF THE EASEMENT(S), SO AS TO ALLOW THE DISTRICT DIRECT ACCESS FROM THE ADJACENT RIGHT-OF-WAY.

EASEMENTS SHALL BE CLEARLY MARKED OR STAKED PRIOR TO THE START OF CONSTRUCTION.

NOTES

1. ALL DIMENSIONS TO UTILITIES ARE TO CENTERLINE OF PIPE UNLESS INDICATED OTHERWISE.
2. CONTRACTOR SHALL VERIFY HORIZONTAL AND VERTICAL ALIGNMENT OF EXISTING UTILITES AND TO NOTIFY THE DESIGN ENGINEER IMMEDIATELY ON ANY DISCREPANCIES PRIOR TO CONSTRUCTION.
3. ALL PROPOSED SEWER IS PRIVATE.
4. SEE RIDGE III-UNIT 3 IMPR. PLANS PREPARED BY PENTACORE FOR OFF-SITE INFORMATION.
5. SEE SHEET HC1 FOR FIRE LANE LOCATION
6. SEE ARCHITECTURAL PLANS FOR ALL CONNECTION DETAILS AT THE BUILDING
7. SEE LANDSCAPE PLANS BY RICHARD PRICE & ASSOC. FOR ALL IRRIGATION AND LANDSCAPING INFORMATION

SIGHT VISIBILITY ZONES

NO WALLS, FENCES, TREES, SHRUBS, UTILITY APPURTENANCES OR ANY OTHER OBJECT, OTHER THAN TRAFFIC CONTROL DEVICES AND STREET LIGHT POLES, MAY BE CONSTRUCTED OR INSTALLED WITHIN THE SIGHT VISIBILITY ZONE UNLESS SAID OBJECT IS MAINTAINED AT LESS THAN 24 INCHES IN HEIGHT, MEASURED FROM THE TOP OF CURB.

Call before you Dig. 1-800-227-2600 (NONMEMBERS SERVICE ALERT (NSA))

Call before you OVERHEAD 1-702-593-6111 (NEVADA POWER CUSTOMERS SAFETY SERVICES DEPARTMENT)

APPROVED FOR CONSTRUCTION

LAS VEGAS VALLEY WATER DISTRICT DATE

FOR REVIEW ONLY
PROFESSIONAL ENGINEER - STATE OF NEVADA
ROBERT F. HARNYAK
No. 12855
CIVIL
11/05/01

REV.	DATE	DESCRIPTION	APPROVAL
1	12/03/01	REVISE SIDEWALK AND STRIPING PER ARCHITECT	12/12/01

The Keith Companies
444 East Warm Springs Road, Suite 110, Las Vegas, Nevada 89119
Phone (702) 263-8206 Fax (702) 263-8629
Water Resources Land Planning Civil Engineering Land Surveying Mapping Environmental Services

WORLD PREMIER INVESTMENTS
SAV-ON • NWC ANN AND DECATUR
MASTER UTILITY PLAN
NOVEMBER 5, 2001

JOB # 51589.00
SHEET NO.:
C4
4 OF 6 SHEETS
CLV#: 107-Y3507