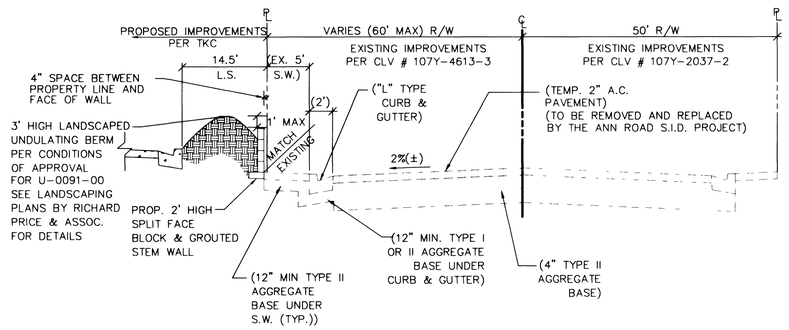

ANN ROAD
110' STREET SECTION

STA. 16+30.27 TO STA. 20+00
PER STD. DWG. NO. 203 (MODIFIED)
NOT TO SCALE

A / C3

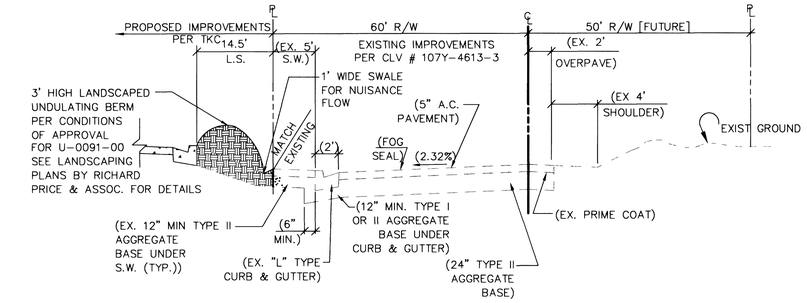

DECATUR BOULEVARD
110' HALF STREET SECTION W/ TURN LANE

STA. 10+70.47 TO STA. 13+18.61
PER STD. DWG. NO. 203 (MODIFIED)
NOT TO SCALE

B / C3

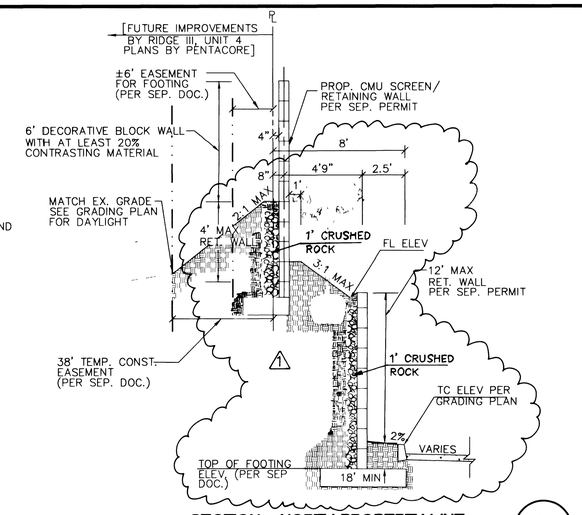

SECTION - NORTH PROPERTY LINE

NOT TO SCALE

C / C3

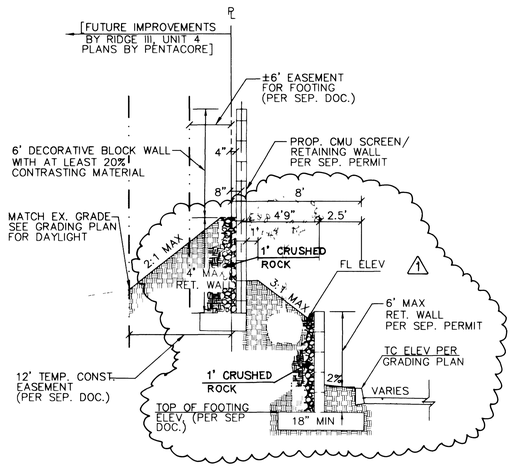

SECTION - WEST PROPERTY LINE

NOT TO SCALE

D / C3

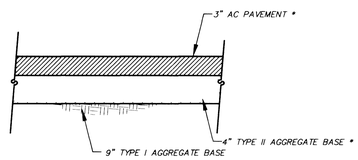

* (CONTRACTOR TO VERIFY PAVEMENT SECTIONS WITH SOILS ENGINEER PRIOR TO CONSTRUCTION.)

SECTION SHOWN IS PER SOILS REPORT BY GEOTEK, INC. DATED MARCH 13, 2001 GTI-NEVADA WO NO. 3276-LV6

TRUCK TRAFFIC PAVEMENT SECTION

(NOT TO SCALE)

1 / C3

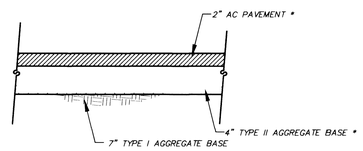

* (CONTRACTOR TO VERIFY PAVEMENT SECTIONS WITH SOILS ENGINEER PRIOR TO CONSTRUCTION.)

SECTION SHOWN IS PER SOILS REPORT BY GEOTEK, INC. DATED MARCH 13, 2001 GTI-NEVADA WO NO. 3276-LV6

LIGHT TRAFFIC PAVEMENT SECTION

(NOT TO SCALE)

2 / C3

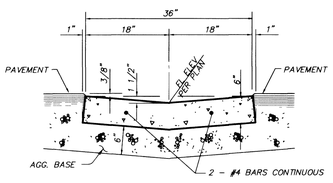

3' WIDE VALLEY GUTTER

(NOT TO SCALE)

3 / C3

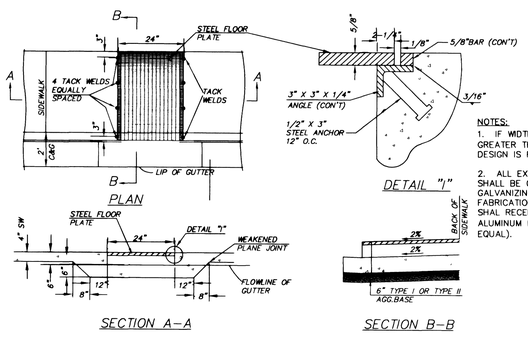

NOTES:
1. IF WIDTH OF PLATE IS GREATER THAN 24", A SPECIAL DESIGN IS REQUIRED.
2. ALL EXPOSED METAL PARTS SHALL BE GALVANIZED AND ALL GALVANIZING DAMAGED BY FABRICATION OR INSTALLATION SHAL RECEIVE TWO COATS OF ALUMINUM PAINT (GALVONOX OR EQUAL).

2' SIDEWALK DRAIN

PER STD. DWG. NO. 236
NOT TO SCALE

4 / C3

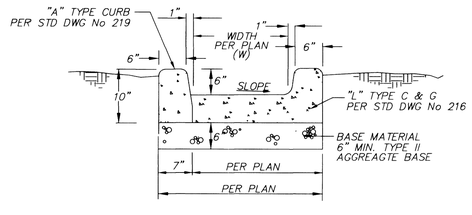

DRAINAGE CHANNEL

NOT TO SCALE

5 / C3

REV.	DATE	DESCRIPTION	APPROVAL
1	12/03/01	REVISE RET WALL DETAILS DUE TO STRUCT. CALCS	12/12/01 DATE

PROFESSIONAL ENGINEER - STATE OF NEVADA
ROBERT L. HARMON
No. 13855
11/05/01

The Keith Companies TKC
444 East Warm Springs Road, Suite 110, Las Vegas, Nevada 89119
Phone (702) 263-8206 Fax (702) 263-8208
Water Resources Land Planning Civil Engineering Land Surveying Mapping Environmental Services

WORLD PREMIER INVESTMENTS
SAV-ON • NWC ANN AND DECATUR
DETAILS
NOVEMBER 5, 2001

JOB # 51589.00
SHEET NO.:
C3
3 OF 6 SHEETS
CLV# /07-V3507

36123 31751

HP Designjet 1050C Helmlett-Packard gd-HP-GL/2 devices, AOI 4 3 (v4 6) - 20000705