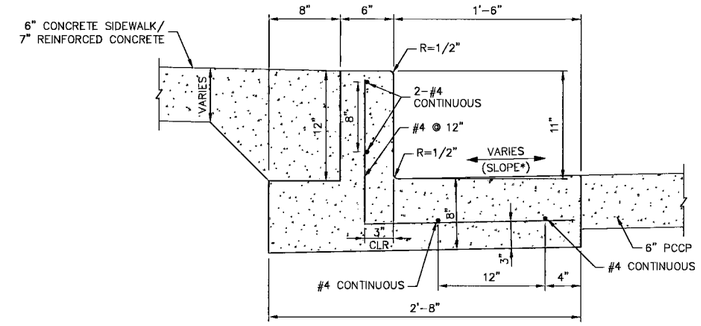


## CURB AND GUTTER DETAIL (11-INCH SPECIAL)

NOT TO SCALE

7 / C-4

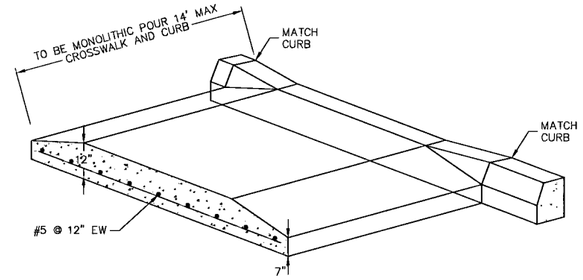


## RAISED CONCRETE PEDESTRIAN CROSSWALK

NOT TO SCALE

4 / C-4

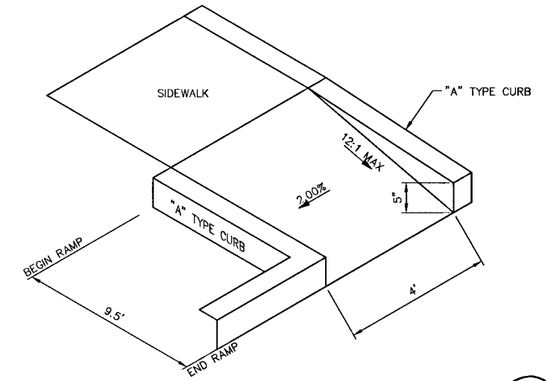


## SPECIAL SIDEWALK RAMP

NOT TO SCALE

1 / C-4

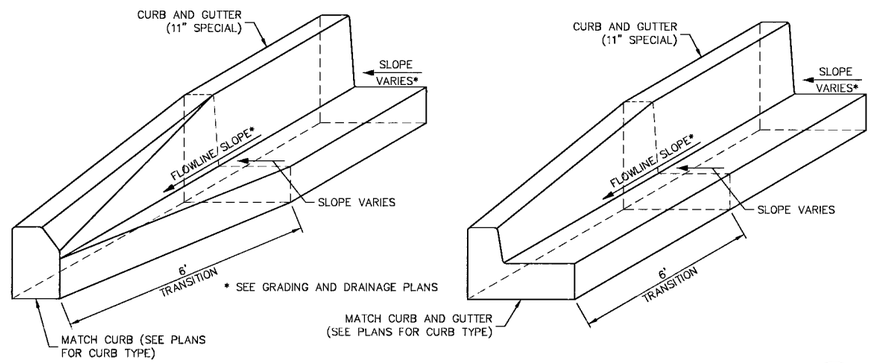


## CURB AND GUTTER TRANSITION

NOT TO SCALE

8 / C-4

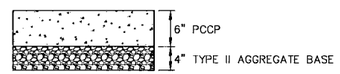


NOTES:

EXPANSION JOINTS: CONTRACTOR SHALL PROVDE ½" EXPANSION JOINT FILLER AND SEALANT AT MAXIMUM SPACING OF 150'-0" O.C.. PROVIDE #4 x 2'-0" LONG SLIP DOWELS @ 18" O.C. WITH 1'-0" EMBEDMENT AT EXPANSION JOINT

WEAKENED PLANE JOINTS: CONTRACTOR SHALL PROVIDE WEAKENED PLANE JOINT AT 10'-0" TO 15'-0" O.C. IN EACH DIRECTION. DEPTH OF THE WEAKENED PLANE JOINT SHALL BE 1/3 OF THE SLAB THICKNESS.

SUBMITTALS: CONTRACTOR SHALL SUBMIT CONTROL JOINT SITE PLAN AND DETAILS FOR OWNER REVIEW.

## TYPICAL PORTLAND CEMENT CONCRETE PAVEMENT SECTION

NOT TO SCALE

5 / C-4

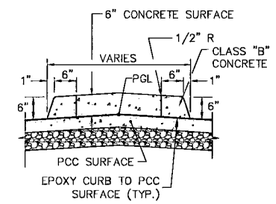


NOTES:

1. 1/2" RADIUS ROUNDED EDGES ON ALL EXPOSED CORNERS.

2. MEDIAN CURB SHALL BE CLASS "B" CONCRETE SLAB

3. FOR CONCRETE SLAB CONSTRUCT WEAKENED PLANE JOINT EVERY 10 FEET AND EXPANSION JOINT EVERY 30 FEET.

4. EXPANSION JOINT AT ALL COLD JOINTS, AT BEGINNING AND END OF RETURN AND 30 FEET MAX. INTERVALS FOR FORMED CURB.

5. FOR EXPANSION JOINT AND WEAKENED PLANE DETAIL SEE USD NO. 234.

6. CURBS MAY BE PLACED MONOLITHICALLY WITH CONCRETE SURFACE.

## TACK ON-MEDIAN DETAIL

NOT TO SCALE

2 / C-4

## 6-INCH CONCRETE SIDEWALK SECTION

NOT TO SCALE

9 / C-4

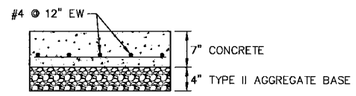


## REINFORCED CONCRETE SURFACE SECTION

NOT TO SCALE

10 / C-4

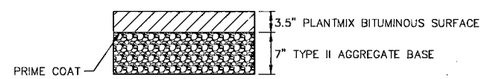


## TYPICAL PLANTMIX BITUMINOUS SURFACE SECTION

NOT TO SCALE

6 / C-4

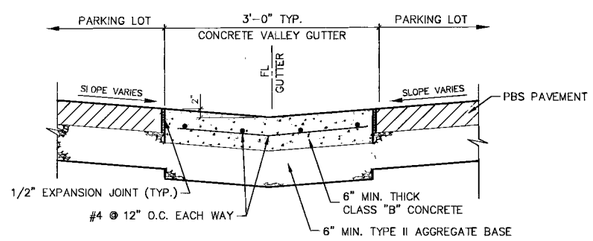


## CONCRETE VALLEY GUTTER

NOT TO SCALE

3 / C-4

WESTCLIFF TRANSIT CENTER

| REV. NO. | DATE | DESCRIPTION | APPROVED |
|---|---|---|---|
| | | | |

RTC

# WESTCLIFF TRANSIT CENTER

## CONSTRUCTION DETAILS

REGIONAL TRANSPORTATION COMMISSION OF SOUTHERN NEVADA

PROFESSIONAL ENGINEER - STATE OF NEVADA
TIMOTHY A. McCOY
Exp. 12/31/2011
CIVIL
No. 11511
1/5/10

PROJECT No: 680-108 DRAWN BY: JS
DESIGNED BY: FJG CHECKED BY: TAM
APPROVED BY

G.C. WALLACE COMPANIES
ENGINEERS | PLANNERS | SURVEYORS
1555 S. RAINBOW BLVD · LAS VEGAS, NV 89146
T: 702.804.2000 · F: 702.804.2299 · GCWALLACE.COM

SCALE —
HORIZ: NONE
VERT: NONE
FIELD BOOK 107V5346

DRAWING NO. C-4
SHT. 12 OF 29
CLV NO. 35994

120995