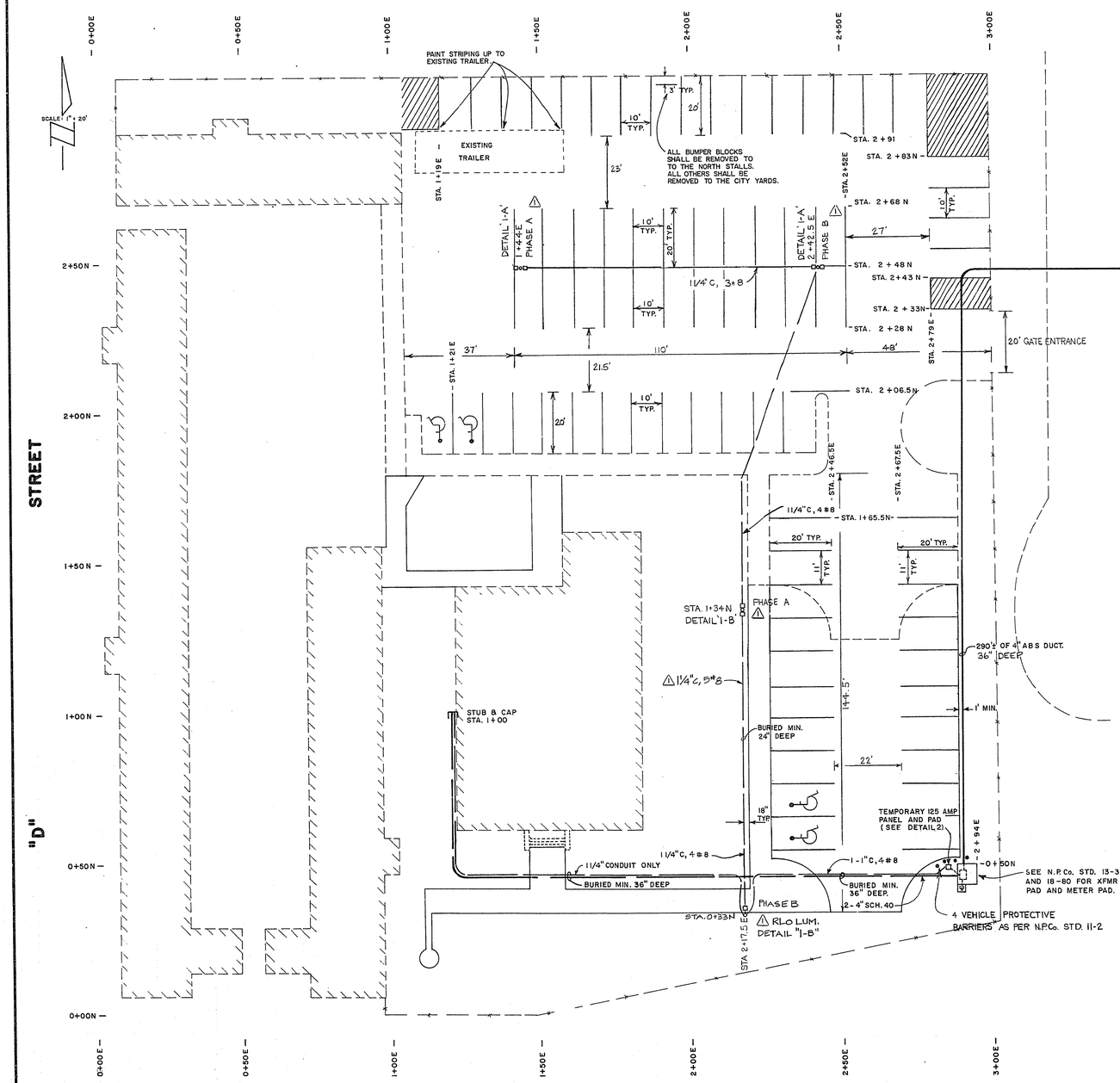

APPROXIMATE QUANTITIES – THIS SHEET

	ITEM Nº	DESCRIPTION	UNIT	QUANTITY
	623 G.01.0125	125 AMP LOAD CENTER & TIME CLOCK	L.S.	LUMP SUM
	623 G.01.0200	TRANSFORMER PAD AND SERVICE	L.S.	LUMP SUM
	623 G.02.0110	1 IN. PVC SCH 40 CONDUIT	L.F.	70
	623 G.02.0125	1-1/4 IN. PVC SCH 40 CONDUIT	L.F.	465
	623 G.02.0140	4 IN. PVC SCH 40 CONDUIT	L.F	450
	623 G.03.0424	24 IN. DEEP TRENCH AND BACKFILL	L.F.	310
	623 G.03.0436	36 IN. DEEP TRENCH AND BACKFILL	L.F.	225
	623 G.03.0648	48 IN. DEEP FOUNDATION	E.A	2
	623 G.03.0690	90 x 24 IN. DIAM. FOUNDATION	EA.	2
	623L.02.0140	40 FT. 11 GAUGE STEEL POLE	EA.	4
	623L.02.0400	400 W H.P.S FLOODLIGHT PLO	EA.	6
	" "	" " " RLO	EA.	1
	623 L.02.0508	NO. 8 THW COPPER CONDUCTOR	L.F.	1420
*	628.00.00	PAINTING AND STRIPING	L.F.	2800

* THIS ITEM SHALL BE COMPENSATED FOR UNDER BID GROUP 1 – PARKING LOT AND SIDEWALKS.

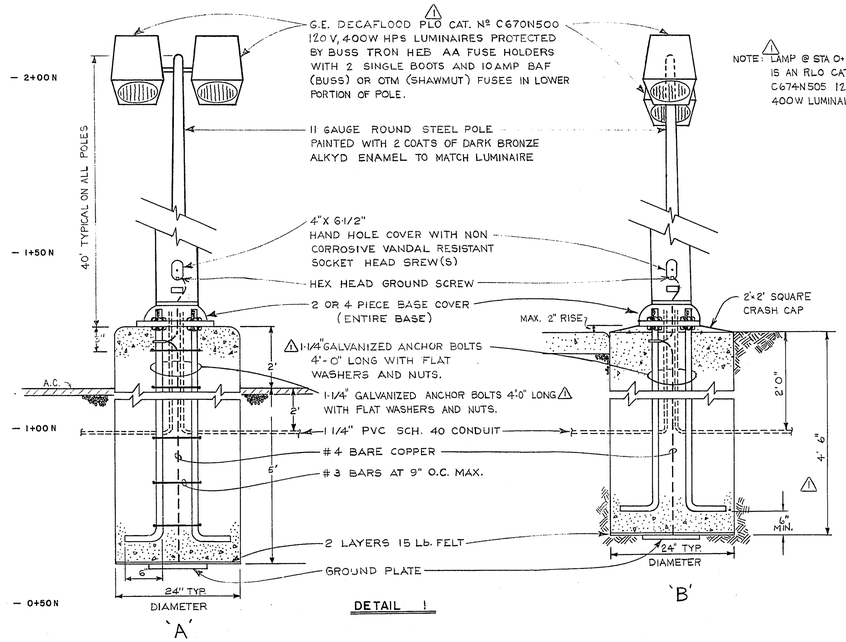

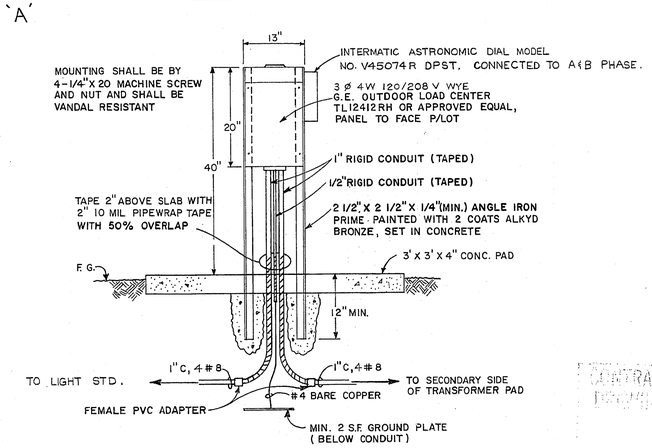

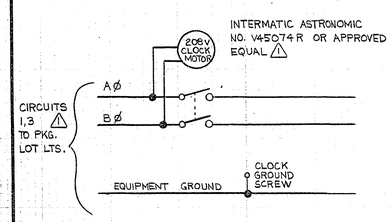

LEGEND

- 2 - 4" SCH 40 PVC CONDUIT
- 1" or 1-1/4" SCH 40 PVC CONDUIT
- 4" ABS CONDUIT
- SINGLE 400W RLO LUMINAIRE
- DOUBLE 400W PLO LUMINAIRE

CKT	BKR	LOAD (WATTS) LTG.	RECPT.	MISC.	DESCRIPTION
1	40	1600			AREA LIGHTING
2					SPACE
3	40	1200			AREA LIGHTING
4					SPACE
5					"
6					"
7					"
8					"
9					"
10					"
11					"
12					"
TOTAL		2800			

Revisions	Date
LUMINAIRE & LUMINS DATA	5-6-82

W.A. no. 2088
Scale (h) 1" = 20' Scale (v) —
Fld. bk. no. 78-2X Date FEB. 1981
Design by M.E. JONES Drawn by R.L. LEE
Approved by the Director of Public Services Date

Department of Public Services
Engineering Design Division

ELECTRICAL

WEST SIDE SCHOOL
PARKING LOT PHASE II

CONTRACT DRAWING

Drawing no. 513-53C 6/6