BENCHMARK

CLV 7C00365WS
RIVET + PLATE IN TOP OF CURB, NE RETURN JONES BLVD AND CHARLESTON BLVD
ELEVATION 2290.30 FEET NAVD 88
6/18/0847 W

BASIS OF BEARING

N 89°33'00" W - BEING THE SOUTH LINE OF SECTION 36, TOWNSHIP 20 SOUTH, RANGE 60 EAST MDM, CLARK COUNTY, BEING ALSO THE CENTERLINE OF CHARLESTON BLVD

NEVADA DEPARTMENT OF TRANSPORTATION NDOT PERMIT REQUIRED

AN APPROVED NDOT OCCUPANCY PERMIT SHALL BE OBTAINED PRIOR TO ANY CONSTRUCTION WITHIN THE NDOT RIGHT-OF-WAY.

FIRE HYDRANT INSTALLATION

FIRE HYDRANT(S) SHALL BE INSTALLED IN ACCORDANCE WITH THE UDACS STANDARD PLATE NO 7

PROJECT NAME: West Charleston Plaza P.C.#
This project water plan complies with the Las Vegas Valley Water District's technical requirements. However, this water plan is

NOT APPROVED FOR CONSTRUCTION

at this time and this signature does not provide or imply a water commitment.

LVWWD #52 — DATE 8-3-00

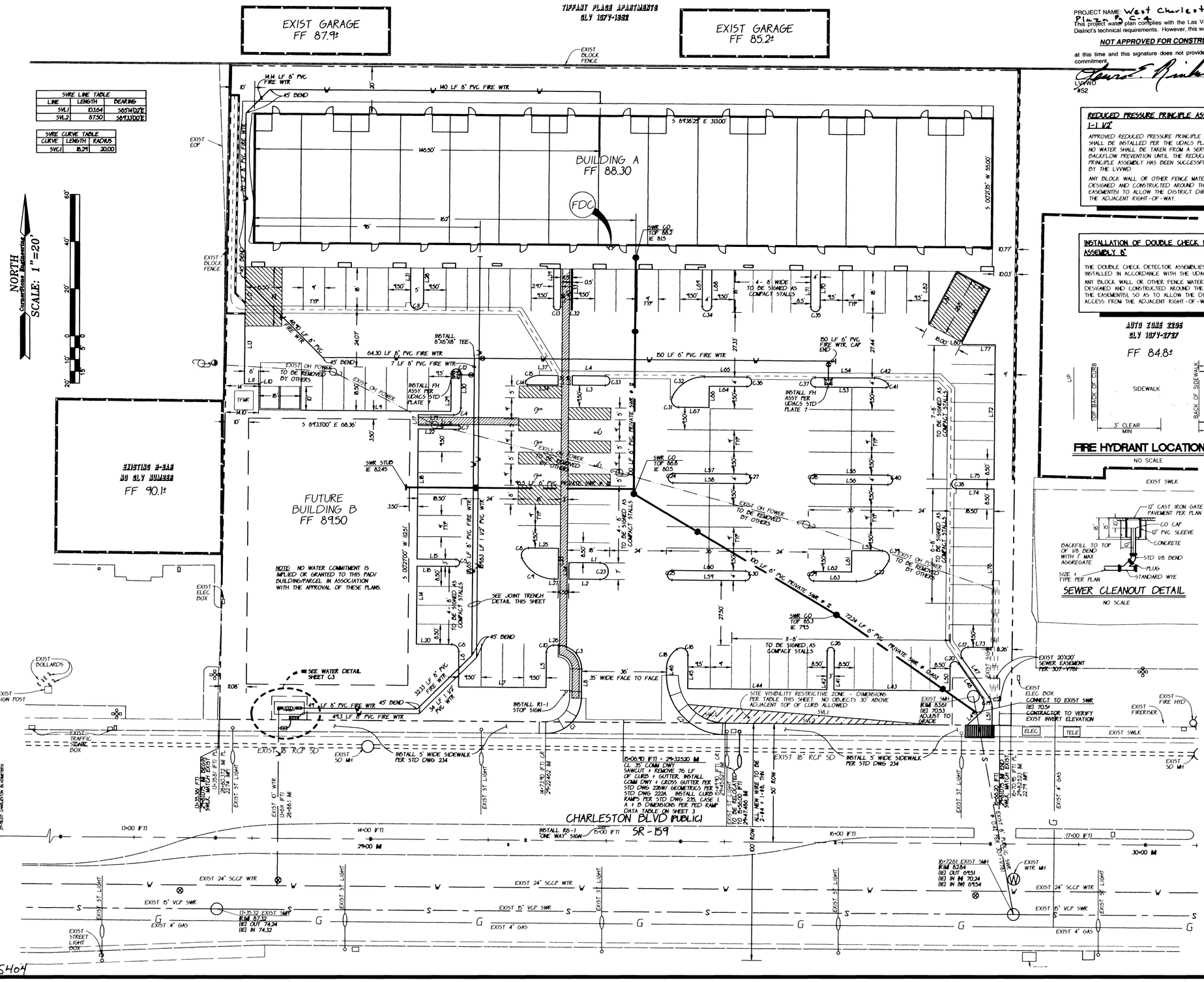

SWRE LINE TABLE		
LINE	LENGTH	BEARING
SVL1	10.164	S65°14'02"E
SVL2	8.750	S89°33'00"E

SWRE CURVE TABLE		
CURVE	LENGTH	RADIUS
SVC1	18.29	20.00

REDUCED PRESSURE PRINCIPLE ASSEMBLY 1-1 1/2"

APPROVED REDUCED PRESSURE PRINCIPLE ASSEMBLY(S) SHALL BE INSTALLED PER THE UDACS PLATE NO 11A. NO WATER SHALL BE TAKEN FROM A SERVICE REQUIRING BACKFLOW PREVENTION UNTIL THE REDUCED PRESSURE PRINCIPLE ASSEMBLY HAS BEEN SUCCESSFULLY TESTED BY THE LVWWD.

ANY BLOCK WALL OR OTHER FENCE MATERIAL SHALL BE DESIGNED AND CONSTRUCTED AROUND THE OUTSIDE OF THE EASEMENT(S) TO ALLOW THE DISTRICT DIRECT ACCESS FROM THE ADJACENT RIGHT-OF-WAY.

INSTALLATION OF DOUBLE CHECK DETECTOR ASSEMBLY 8"

THE DOUBLE CHECK DETECTOR ASSEMBLIES SHALL BE INSTALLED IN ACCORDANCE WITH THE UDACS PLATE 20B. ANY BLOCK WALL OR OTHER FENCE MATERIAL SHALL BE DESIGNED AND CONSTRUCTED AROUND THE OUTSIDE OF THE EASEMENT(S) SO AS TO ALLOW THE DISTRICT DIRECT ACCESS FROM THE ADJACENT RIGHT-OF-WAY.

BLY 1079-2737

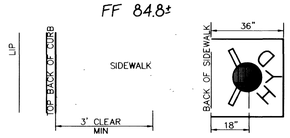

FIRE HYDRANT LOCATION DETAIL

NO SCALE

SEWER CLEANOUT DETAIL

NO SCALE

NOTICE!

EXISTING UTILITIES ARE SHOWN ON PLANS FOR THE CONVENIENCE OF THE CONTRACTOR ONLY. THE CONTRACTOR IS RESPONSIBLE FOR THE PROTECTION OF ALL UTILITIES. THE ENGINEER BEARS NO RESPONSIBILITY FOR UTILITIES NOT SHOWN OR SHOWN INCORRECTLY.

AVOID CUTTING UNDERGROUND UTILITIES. IT'S COSTLY.
Call BEFORE YOU Dig
1-800-227-2600
UNDERGROUND SERVICE (USA)

NOTE:

CornerStone Engineering Incorporated ASSUMES NO RESPONSIBILITY FOR EXISTING UTILITY LOCATONS, SHOWN OR NOT SHOWN. THE UTILITIES SHOWN ON THIS DRAWING HAVE BEEN PLOTTED FROM RECORD INFORMATION AND ARE FOR THE CONVENIENCE OF THE CONTRACTOR ONLY. IT IS THE CONTRACTOR'S RESPONSIBILITY TO FIELD VERIFY THE LOCATION AND DEPTH OF ALL RELEVANT UTILITIES PRIOR TO COMMENCEMENT OF ANY CONSTRUCTION. IF A CONFLICT OR DISCREPENCY IS DISCOVERED THE CONTRACTOR IS TO NOTIFY THE ENGINEER OR WORK, IN WRITING, IMMEDIATELY.

SEWER FLOWS

AVERAGE	0.0038 MDG	0.0038 CFS	
PEAK	0.0091 MGD	0.0133 CFS	

ASSUMES 0.1 GPD PER SQ FOOT OF BUILDING, INCLUDING FUTURE PAD. PEAK FACTOR OF 3.5

CONSTRUCTION NOTE:

ALL EXISTING UTILITY STRUCTURES WITHIN CONSTRUCTION AREA SHALL BE ADJUSTED TO MATCH FINISH GRADE (I.E., WV, BOX, WMH, ANNODE BOX, FH, TEL BOX, ETC)

NOTE:

ALL DIMENSIONS TO UTILITIES ARE TO CENTERLINE OF PIPE UNLESS INDICATED OTHERWISE

CONTRACTOR SHALL VERIFY HORIZONTAL AND VERTICAL ALIGNMENT OF EXISTING UTILITIES AND TO NOTIFY THE DESIGN ENGINEER IMMEDIATELY ON ANY DISCREPANCIES PRIOR TO CONSTRUCTION

FIRE LANE NOTE:

FIRE LANE CURBS TO BE PAINTED RED PER CITY OF LAS VEGAS FIRE DEPT STANDARDS ARE DENOTED WITHIN BACK OF CURB TABLES WITH A "PR". SEE SHEET 3

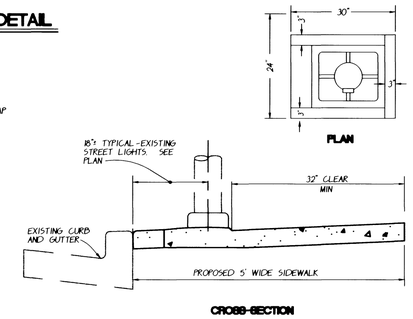

MODIFIED CRASH CAP

NO SCALE

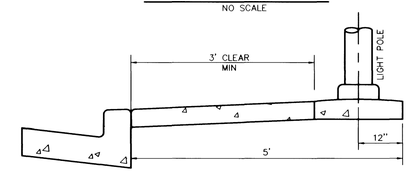

PER CLARK COUNTY DWG 318

STREET LIGHT LOCATION

NO SCALE

APPROVED — CITY OF LAS VEGAS FIRE DEPARTMENT
BY: 8-3-00

APPROVAL OF THESE PLANS SHALL NOT BE CONSTRUED TO BE A PERMIT FOR, OR AN APPROVAL OF, ANY VIOLATION OF ANY THE PROVISION OF THE STATE OR COUNTY LAWS. FIRE FLOW 1,750 GPM AT 20 PSI RESIDUAL.

APPROVED
LAS VEGAS VALLEY WATER DISTRICT — DATE

REPLOT 1

REV	DATE	BY	REVISION
1	7/27/00	CC	REPLOTTED-CHANGED PLANTER ISLANDS IN PARKING AREAS

NOVAD CONSTRUCTION
1408 S JONES BLVD
LAS VEGAS, NV 89102
702-877-8009 FAX 702-258-7749

CornerStone Engineering Inc.
2285-C RENAISSANCE DR
LAS VEGAS, NV 89119
702-731-4711 FAX 702-731-4788

SHEET: HORIZ CONTROL, UTILITY PLAN + ST. LIGHTS

TITLE: WEST CHARLESTON PLAZA W CHARLESTON, EAST OF JONES

DATE: JULY 27, 2000
DRAWN BY:
SCALE: 1"=20'
FILENAME: 269-SU.DWG
XREF FILES: 269-MST.DWG
CHECKED BY:
PROJECT NO: 269-00

SEAL: BRIAN D. RINGER, CIVIL, No. 12309, STATE OF NEVADA, PROFESSIONAL ENGINEER — 7/28/00

SHEET C4
4 OF 5 SHEETS
DRAWING NO. 107-V3300

25407