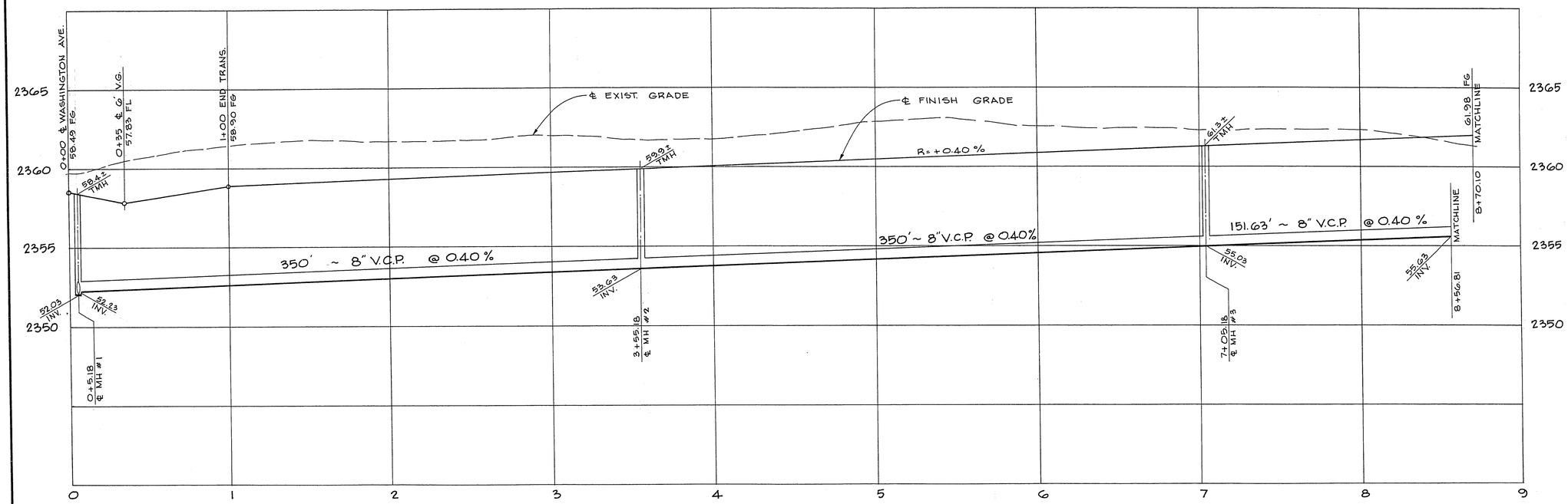

PROFILE

HORIZ : 1" = 30'
VERT. : 1" = 3'

SCALE 1" = 30'

WASHINGTON AVE.

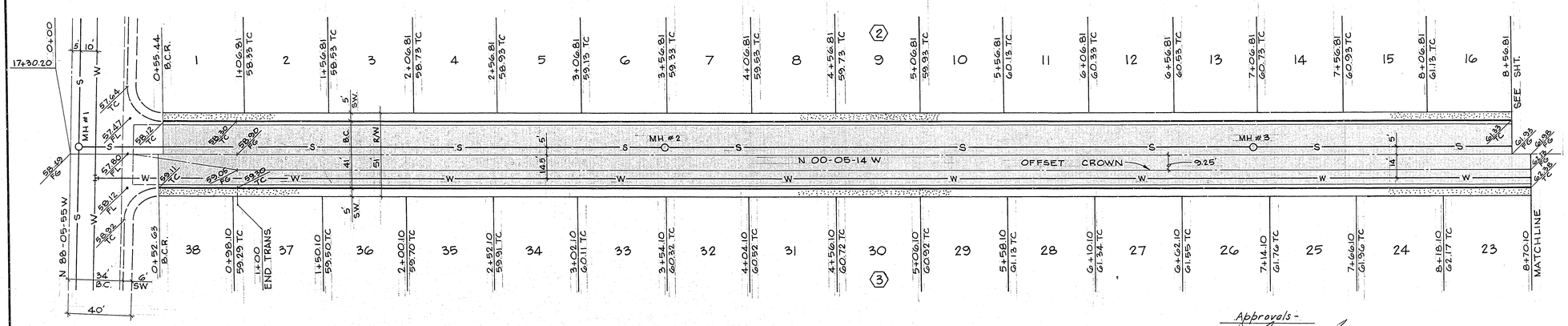

PURCELL DRIVE

Approvals -

City Engineer — 9/20/76 Date

C. D. Pittman for Field Engineer — 4-23-76 Date

R. G. Anton Sanitation Supt. — 4-23-76 Date

5532.0320

3/76 DIETERICH POST 41028

REV	DATE	DESCRIPTION

RECOMMENDED

G. C. WALLACE — R.E. NO. — DATE

MONTGOMERY ENGINEERS OF NEVADA — R.E. NO. — DATE

WALLACE - MONTGOMERY, A JOINT VENTURE

G. C. WALLACE, Consulting Engineer 732-3330

MONTGOMERY ENGINEERS OF NEVADA 735-7198

LAS VEGAS, NEVADA

WATKINS DEVELOPMENT CO.

WATKINS MANOR NO. 2

STREET IMPROVEMENTS

PURCELL DRIVE

SHEET 5 OF 9 SHEETS

2-9-70 107 y-3277-2