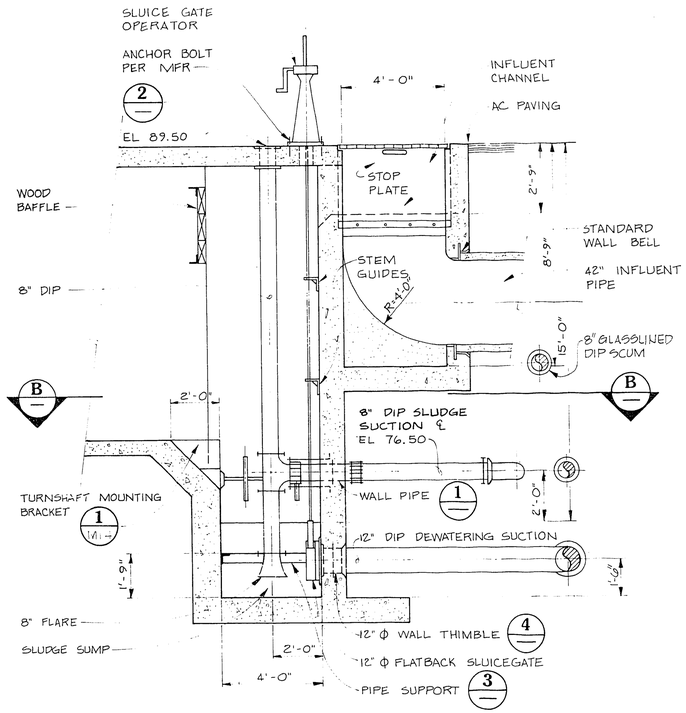

SECTION A (M14)
3/8" = 1'-0"

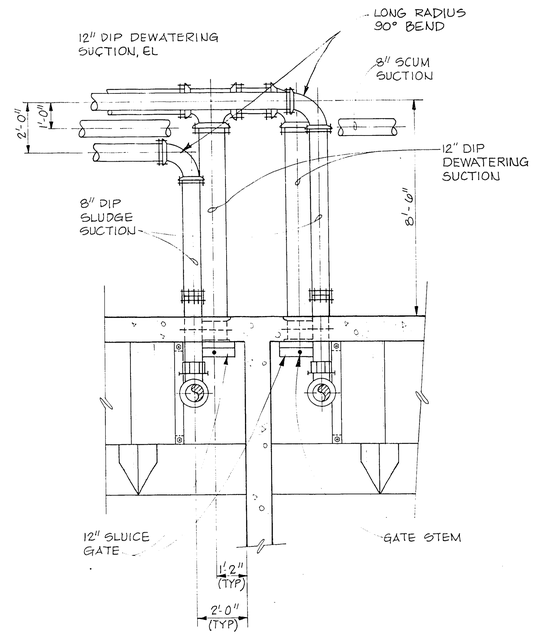

SECTIONAL PLAN (B)
3/8" = 1'-0"

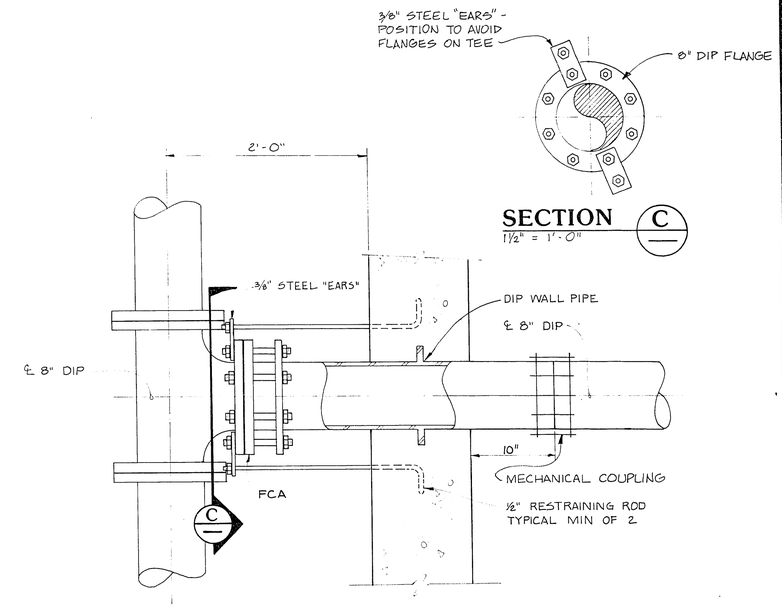

SECTION C
1 1/2" = 1'-0"

DETAIL 1 (M12, M14)
1 1/2" = 1'-0"

SECONDARY SEDIMENTATION BASINS ONLY

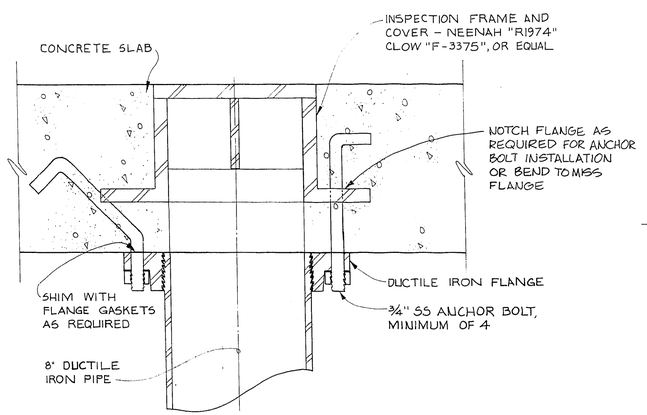

DETAIL 2 (M12, M14)
3" = 1'-0"

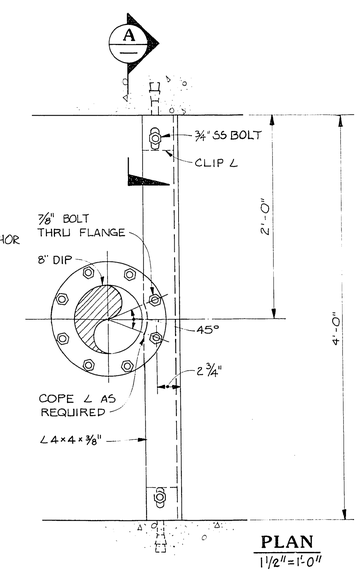

PLAN
1 1/2" = 1'-0"

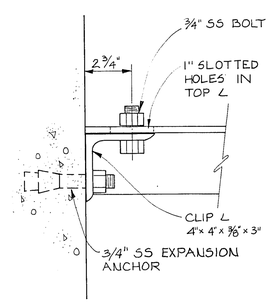

SECTION A
3" = 1'-0"

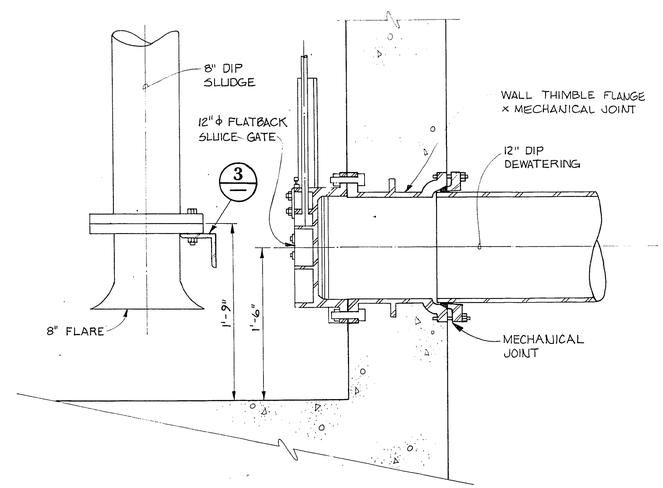

DETAIL 4 (M12, M14)
1 1/2" = 1'-0"

DETAIL 3 (M12, M14)
1/2" = 1'-0"

CULP/WESNER/CULP
CAMERON PARK, CALIFORNIA
SANTA ANA, CALIFORNIA DENVER, COLORADO

H D R
ENGINEERING, INC.
An HDR Engineering Inc. Company

REGISTERED PROFESSIONAL ENGINEER STATE OF NEVADA
DIC-ED
DAVID A. PAVETTI
No. 7241

Job No. 740.11
Designed DAP
Drawn TDB
Checked DJR
Approved DAP
Date 12/9/86

No	By	Revision Description	Date
1		CORRECTED ACCORDING TO CONSTRUCTION RECORDS	6-92

City of Las Vegas
WASTEWATER TREATMENT PLANT
Main Plant Expansion
Contract No. 1

PRIMARY & SECONDARY SEDIMENTATION BASINS
SECTIONS & DETAILS

Sheet 106
M-15
of 164

6-1-116 311.21