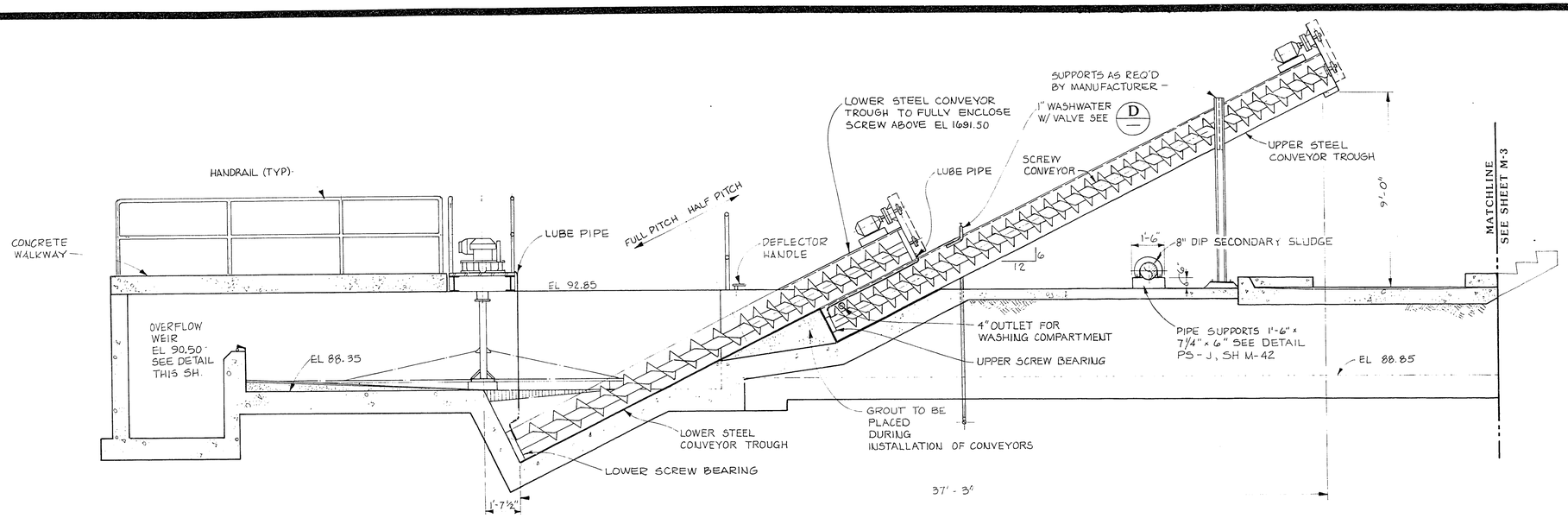

SECTION A
3/8" = 1'-0" M5

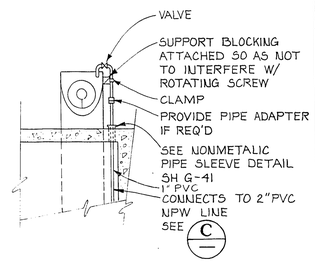

SECTION D
3/8" = 1'-0"

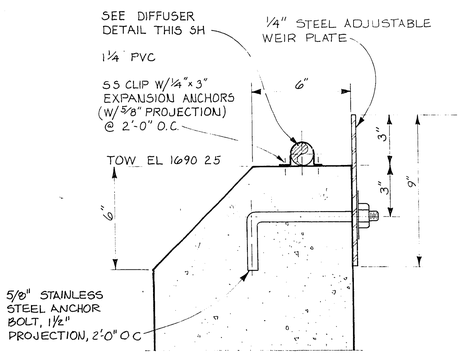

SECTION

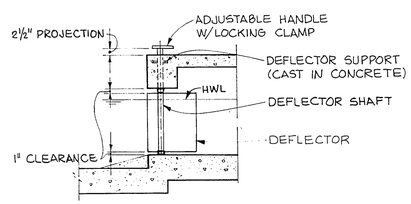

SECTION B
3/8" = 1'-0" M5

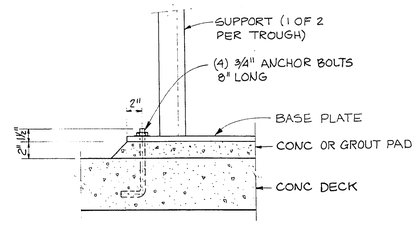

TROUGH SUPPORT DETAIL
1 1/2" = 1'-0"

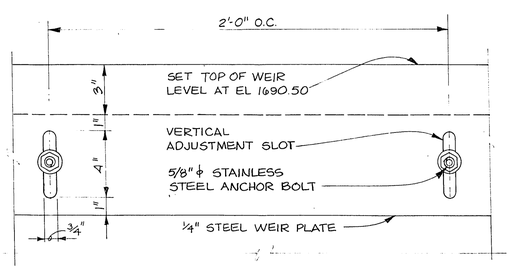

ELEVATION

OVERFLOW WEIR DETAIL
3" = 1'-0"

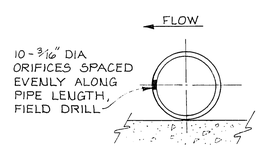

DIFFUSER DETAIL
NTS

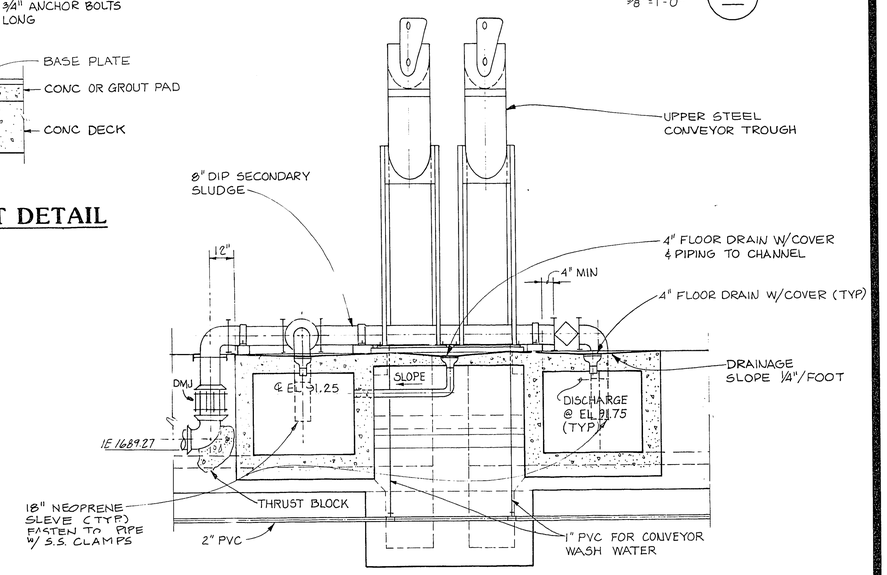

SECTION C
3/8" = 1'-0" M5

CULP/WESSNER/CULP
CONSULTING ENGINEERS
CARDIFF, CALIFORNIA
SANTA ANA, CALIFORNIA
DENVER, COLORADO

HDR
CH2M HILL, Inc.
A Joint Venture by HDR Engineering, Inc. and CH2M Hill, Inc. Companies

REGISTERED PROFESSIONAL ENGINEER
STATE OF NEVADA
DAVID A. PIVETTI
No. 6000

Job No. 740.11	
Designed GPC	
Drawn TDB	
Checked DJR	
Approved DAP	
Date 12/9/88	

No.	By	Revision Description	Date
1		PER CONTRACTOR ACCEPTANCE LETTER DATED 6-92	

City of Las Vegas
WASTEWATER TREATMENT PLANT
Main Plant Expansion
Contract No. 1

HEADWORKS
GRIT BASIN - SECITONS

Sheet 97
M-6
of 164

6-1-97 311.21