NOTE: IT IS THE CONTRACTOR'S RESPONSIBILITY TO COORDINATE THE STRUCTURAL DRAWINGS WITH ALL OTHER CONTRACT DOCUMENTS. STRUCTURAL DRAWINGS DO NOT ATTEMPT TO SHOW ALL PENETRATIONS, OPENINGS, ANCHOR BOLTS, MECHANICAL EQUIPMENT SUPPORTS, PIPE SUPPORTS, ELECTRICAL CONDUITS, ETC.

ALL OPENINGS SHALL CONFORM TO TYPICAL DETAILS ON SHEET S-47.

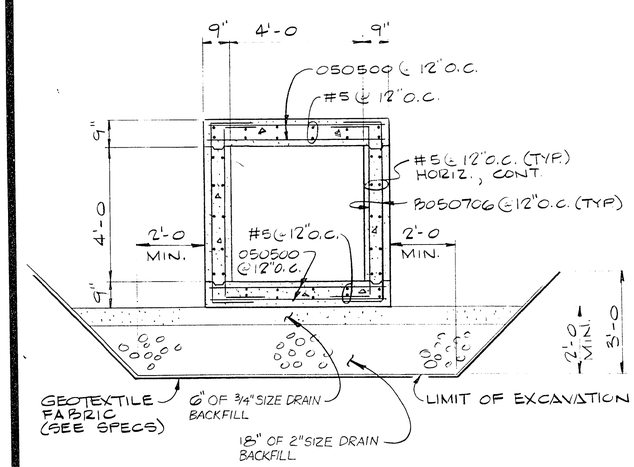

SECTION B
1/2" = 1'-0

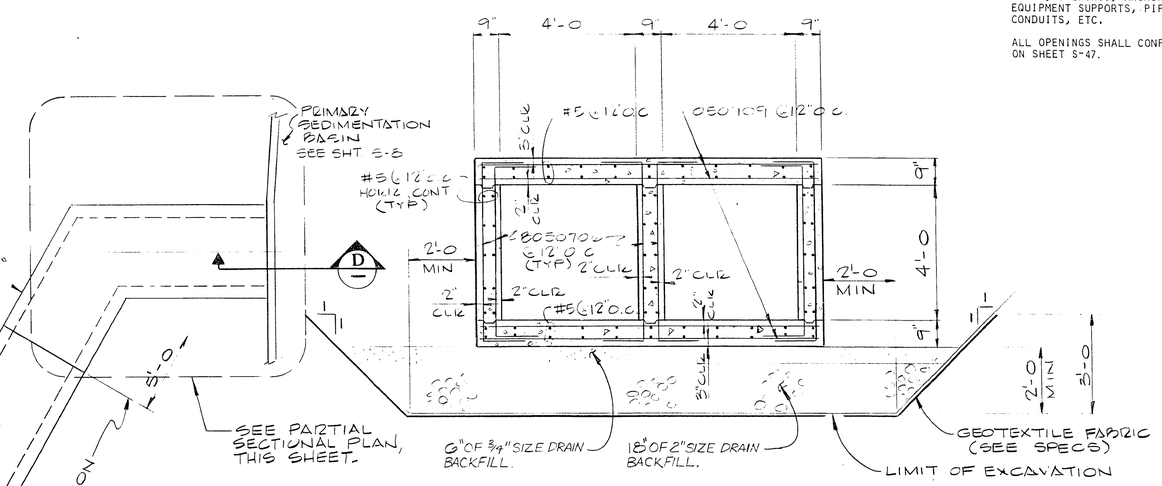

SECTION A
1/2" = 1'-0

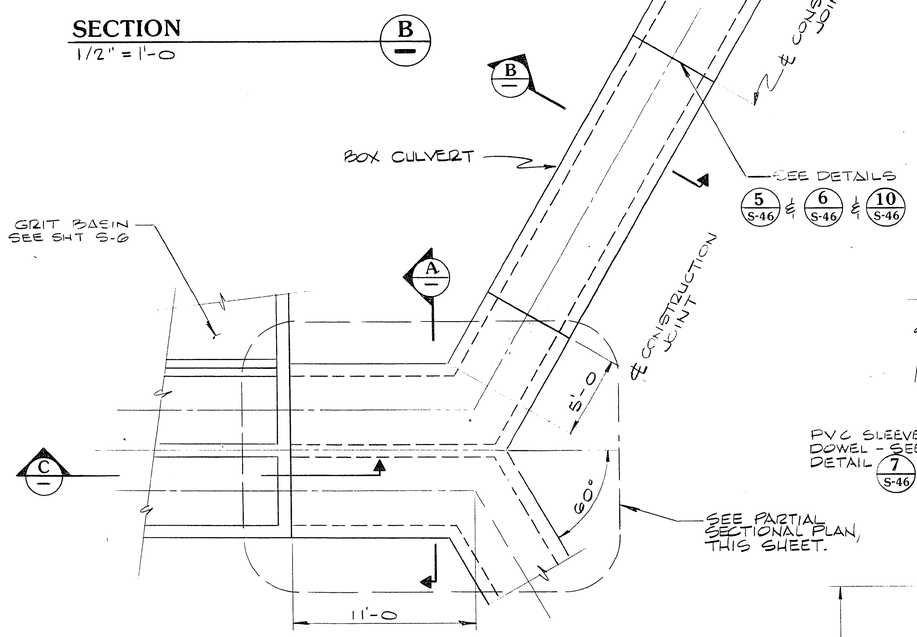

TOP PLAN
1/4" = 1'-0

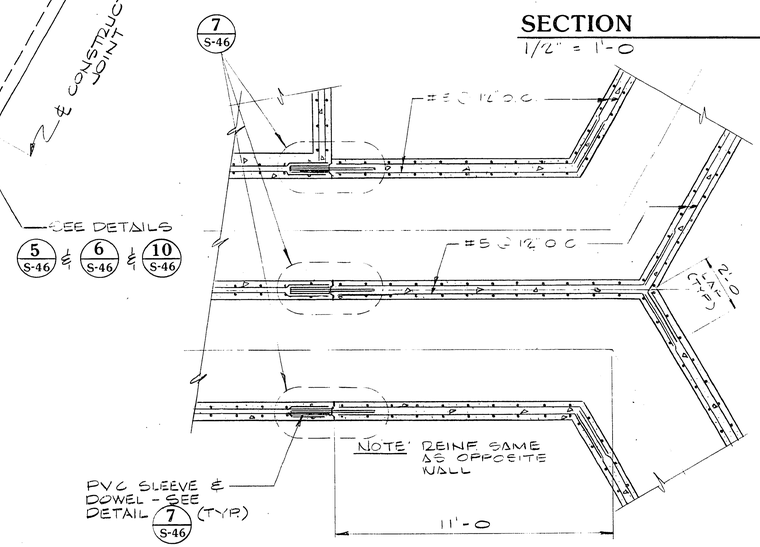

PARTIAL SECTIONAL PLAN
3/8" = 1'-0

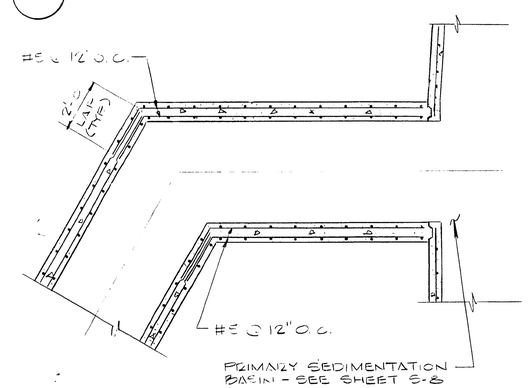

PARTIAL SECTIONAL PLAN
3/8" = 1'-0

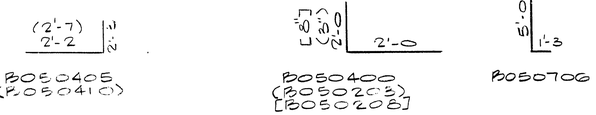

REBAR BEND SCHEDULE

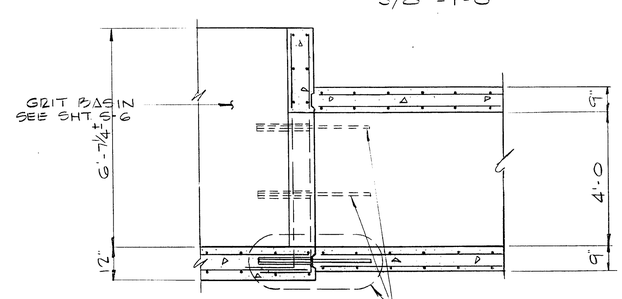

SECTION C
1/2" = 1'-0

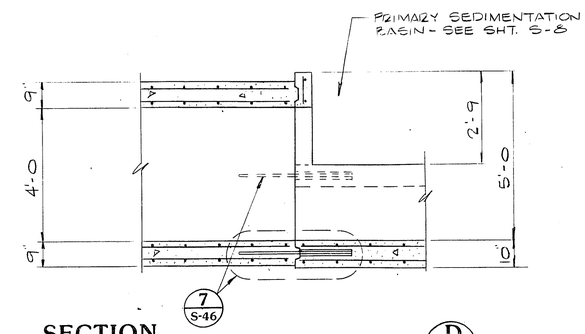

SECTION D
1/2" = 1'-0

CULP/WESNER/CULP
CAMERON PARK, CALIFORNIA
SANTA ANA, CALIFORNIA DENVER, COLORADO

No.	By	Revision Description	Date
1	PW	CORRECTED ACCORDING TO CONSTRUCTION RECORDS	8-92

Job No.
Designed
Drawn
Checked
Approved
Date

G.C. WALLACE
Consulting Engineers, Inc.
1555 South Rainbow Blvd • Las Vegas, Nevada 89102 • 303-1206

BOX CULVERT
PLAN & SECTIONS

Sheet 93
S-48
of 164

6-1-93 311.21