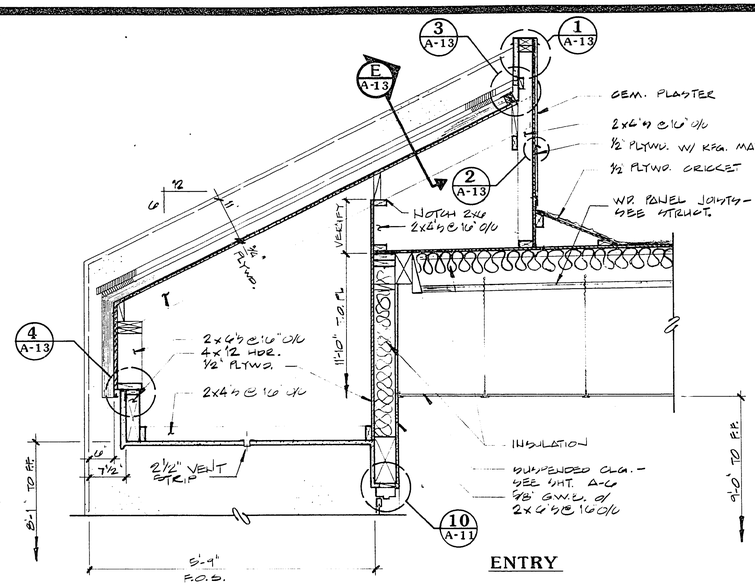

ENTRY

SECTION AT ROOF & SOFFIT (G / A-3)
3/4" — 1'-0"

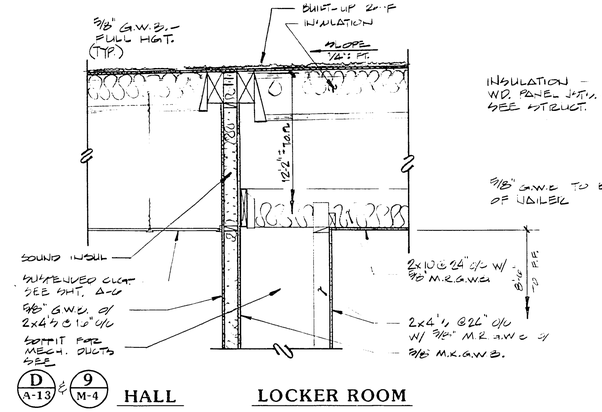

HALL LOCKER ROOM

ROOF SECTION AT BRG. WALL (F / A-3)
3/4" — 1'-0"

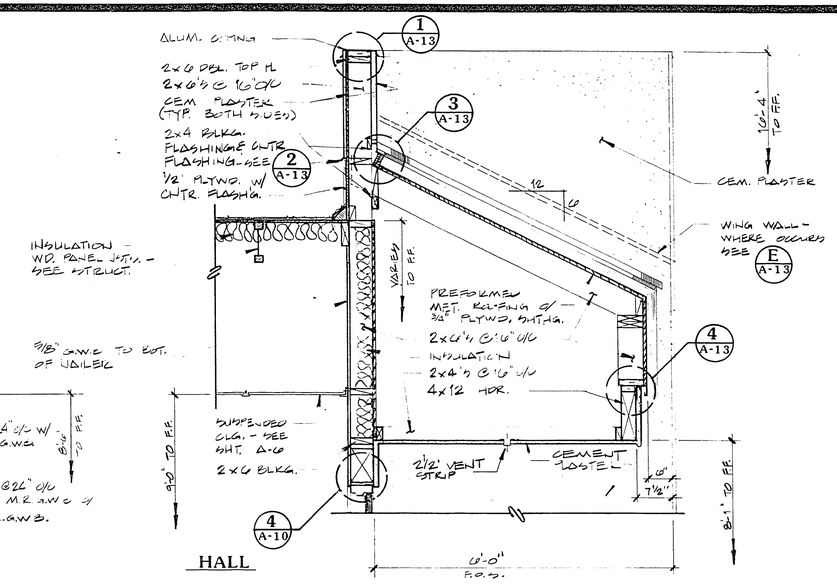

HALL

SECTION AT ROOF & SOFFIT (E / A-2)
3/4" — 1'-0"

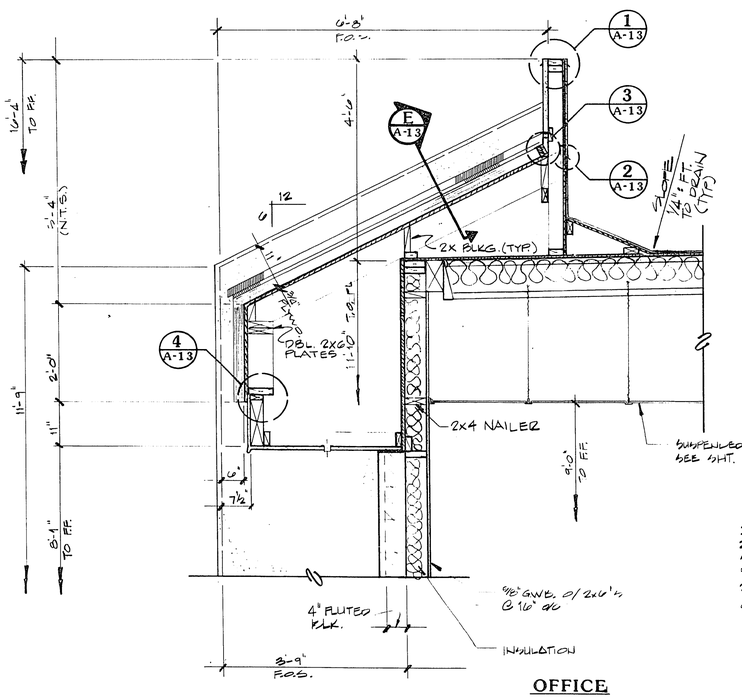

OFFICE

SECTION AT ROOF & SOFFIT (D / A-2)
3/4" — 1'-0"

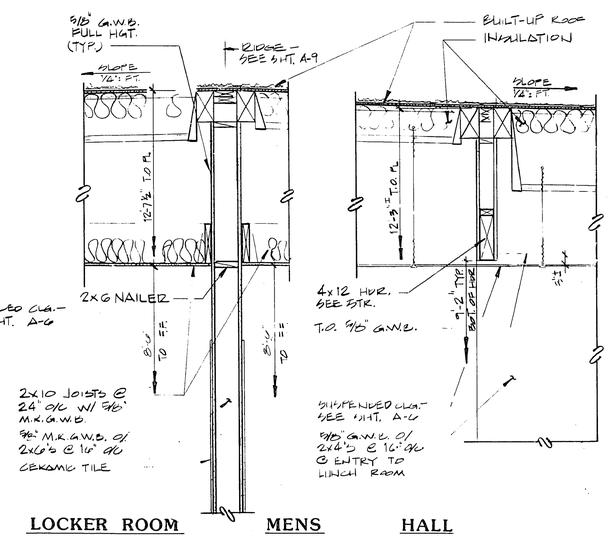

LOCKER ROOM MENS HALL

ROOF SECTION AT BRG. WALL (C / A-3)
3/4" — 1'-0"

ROOF SECTION AT BRG. WALL (B / A-3)
3/4" — 1'-0"

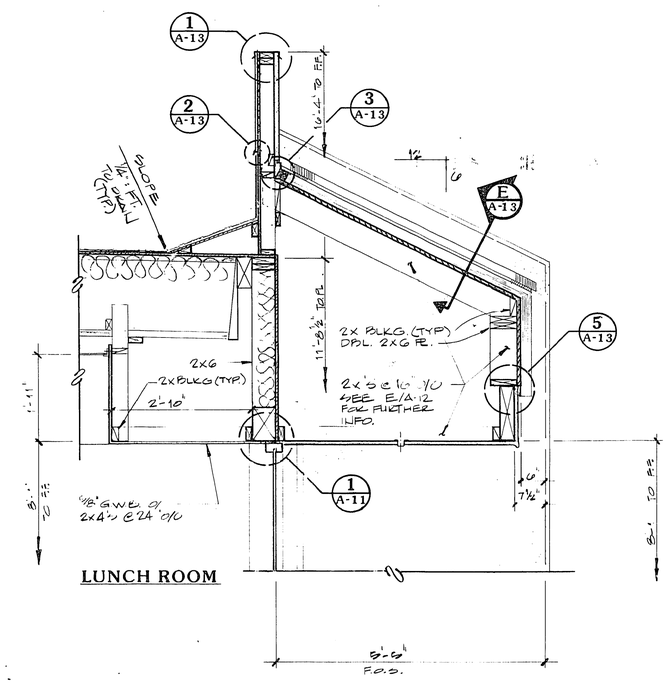

LUNCH ROOM

SECTION AT ROOF & SOFFIT (A / A-3)
3/4" — 1'-0"

GULP/WESNER/GULP
CAMERON PARK, CALIFORNIA
SANTA ANA, CALIFORNIA · DENVER, COLORADO

REGISTERED PROFESSIONAL ENGINEER
Thomas Gulp
7/19/95

H D R
CONSULTING, Inc.
Mechanical Electrical Plumbing Inc.
Consultants

Job No.	740.15
Designed	GDW
Drawn	GDW
Checked	
Approved	
Date	

No.	By	Revision Description	Date
13		CORRECTED ALL PER CONSULTANT RECORDS	12/94

G.C. WALLACE
Consulting Engineers, Inc.
1555 South Rancho Blvd • Las Vegas, Nevada 89102 • 383-1005

CITY OF LAS VEGAS
WASTEWATER TREATMENT PLANT
Maintenance & Storage Buildings
Contract No. 5

MAINTENANCE BUILDING
ROOF & SOFFIT SECTIONS

Sheet 27
A-12
of 57

7-1-101

311.25