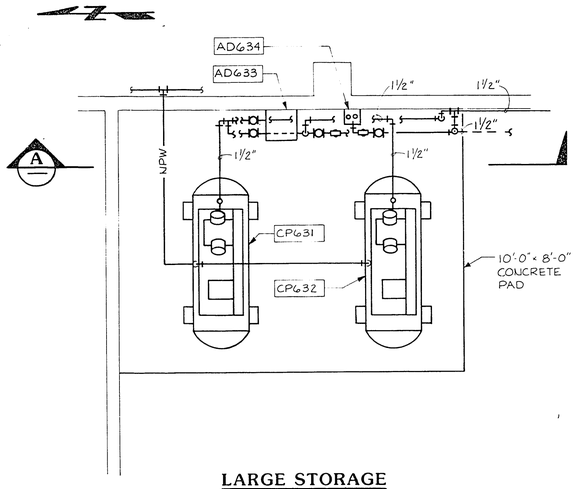

LARGE STORAGE

PARTIAL PLAN

½" = 1'-0"

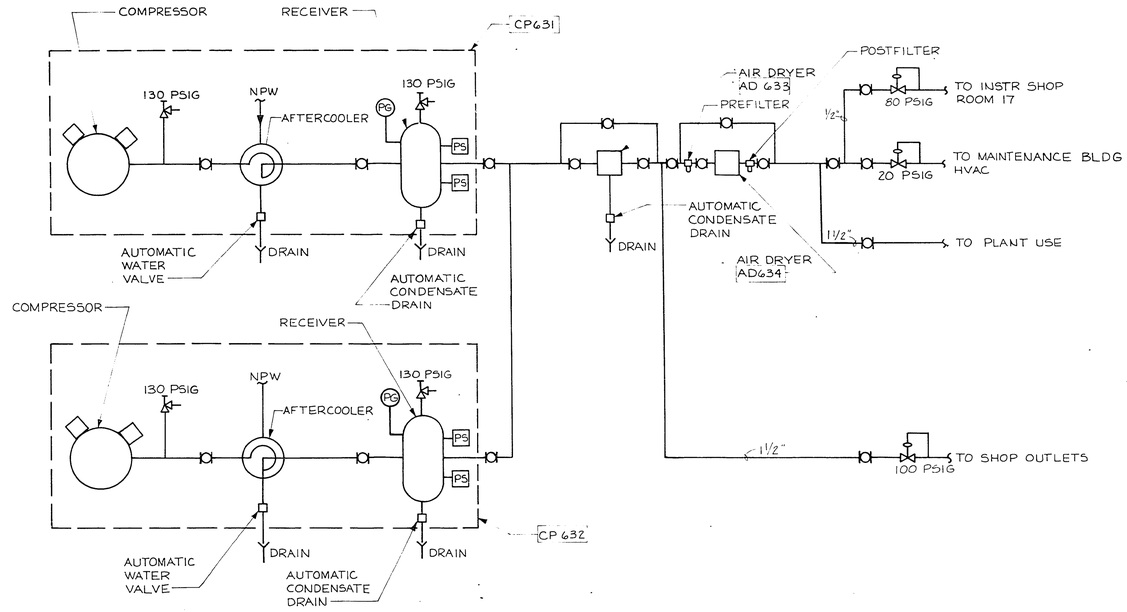

SERVICE AIR AND INSTRUMENT AIR SCHEMATIC

LEGEND

——— - ———	POTABLE COLD WATER PIPING
——— -- ———	POTABLE HOT WATER PIPING
———	DRAINAGE PIPING
—— — ——	DRAINAGE BELOW GROUND
- - - - - -	VENT
———A———	AIR PIPING
———G———	GAS PIPING

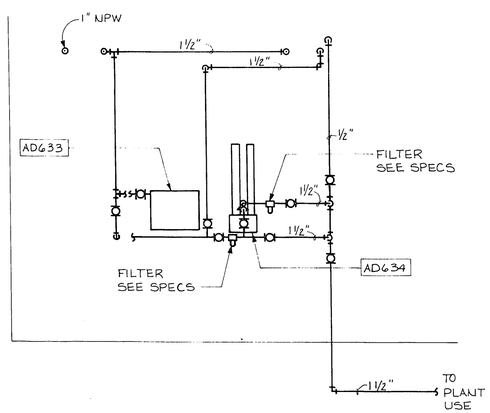

SECTION A

½" = 1'-0"

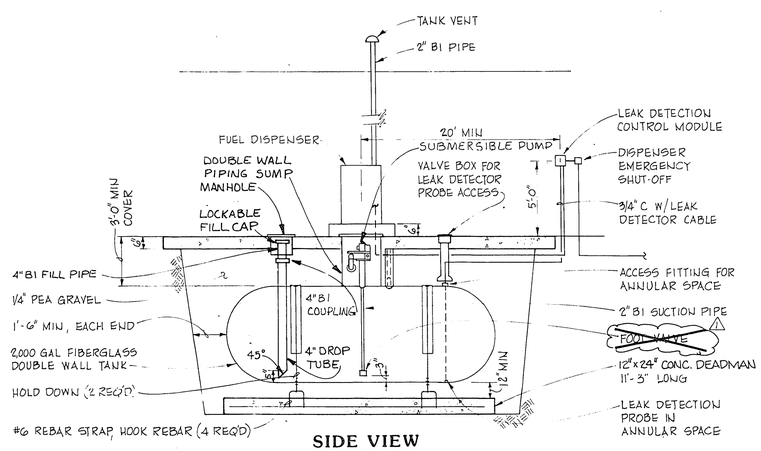

SIDE VIEW

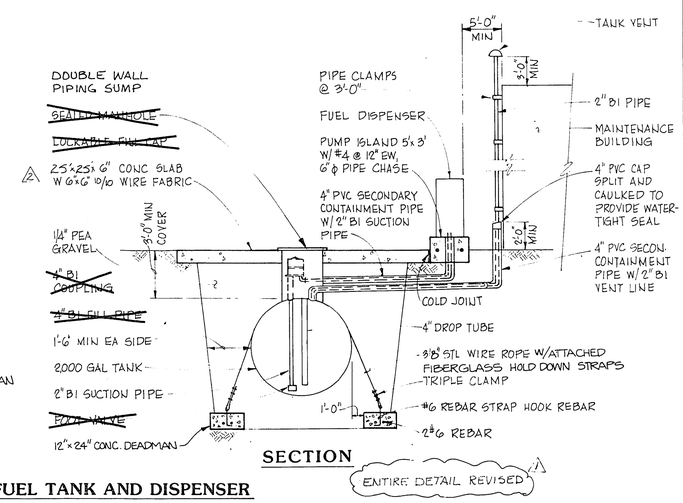

SECTION

UNDERGROUND DIESEL/GASOLINE FUEL TANK AND DISPENSER

DETAIL 1 / G4

NTS

CULP/WESNER/CULP
CAMERON PARK, CALIFORNIA
SANTA ANA, CALIFORNIA • DENVER, COLORADO

HDR
CWC-HDR, Inc.
A Joint Venture of HDR and Wesner/Culp

DAVID A. PHETO
No. 11111
REGISTERED PROFESSIONAL ENGINEER
STATE OF NEVADA

Job No. 740.15
Designed PSC
Drawn MAVE
Checked RGW
Approved DAP
Date 4/24/89

No.	Revision Description	Date
1	ADDENDUM #1	5-89
2	F.O. #26 PER CONTRACT RECORDS	2-90

City of Las Vegas
WASTEWATER TREATMENT PLANT
Contract No. 5
Maintenance & Storage Buildings

MAINTENANCE BUILDING
COMPRESSED AIR
SCHEMATIC, PLAN, SECTIONS
UNDERGROUND STORAGE TANK
DETAILS

Sheet 41
M-6
of 57

7-1-21

311.25