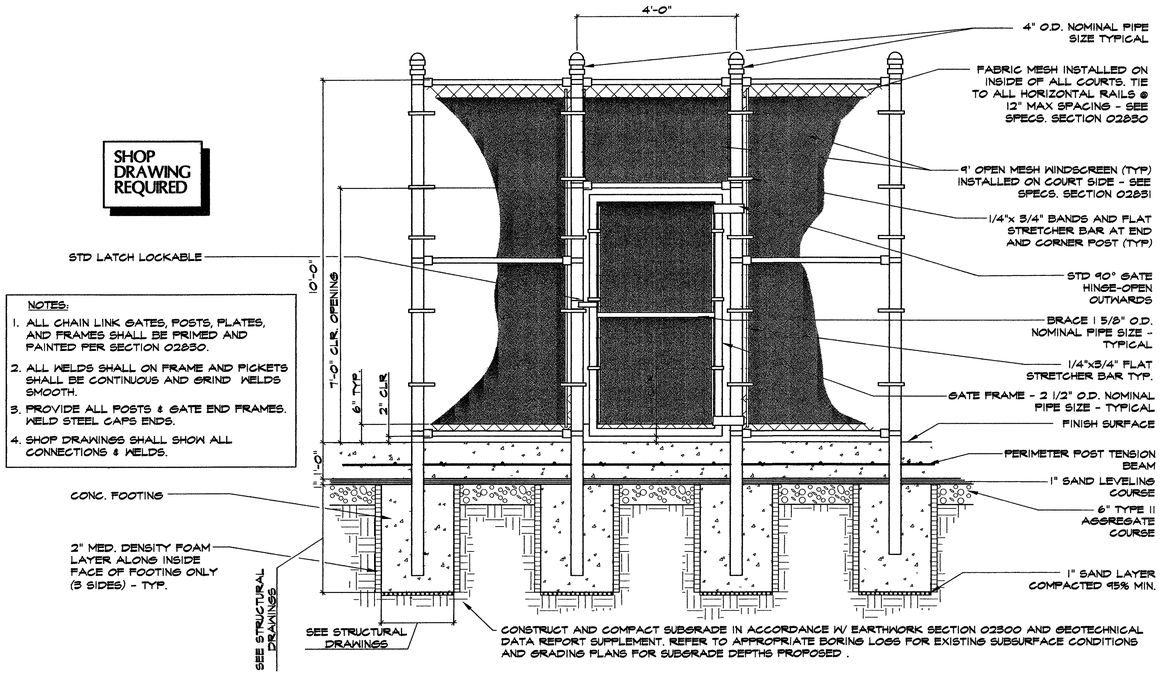

SHOP DRAWING REQUIRED

NOTES:
1. ALL CHAIN LINK GATES, POSTS, PLATES, AND FRAMES SHALL BE PRIMED AND PAINTED PER SECTION 02830.
2. ALL WELDS SHALL ON FRAME AND PICKETS SHALL BE CONTINUOUS AND GRIND WELDS SMOOTH.
3. PROVIDE ALL POSTS & GATE END FRAMES. WELD STEEL CAPS ENDS.
4. SHOP DRAWINGS SHALL SHOW ALL CONNECTIONS & WELDS.

3 TENNIS COURT SINGLE GATE

NTS

NOTES:
1. ALL CHAIN LINK GATES, POSTS, PLATES, AND FRAMES SHALL BE PRIMED AND PAINTED PER SECTION 02830.
2. ALL WELDS SHALL ON FRAME AND PICKETS SHALL BE CONTINUOUS AND GRIND WELDS SMOOTH.
3. PROVIDE ALL POSTS & GATE END FRAMES. WELD STEEL CAPS ENDS.
4. SHOP DRAWINGS SHALL SHOW ALL CONNECTIONS & WELDS.

SHOP DRAWING REQUIRED

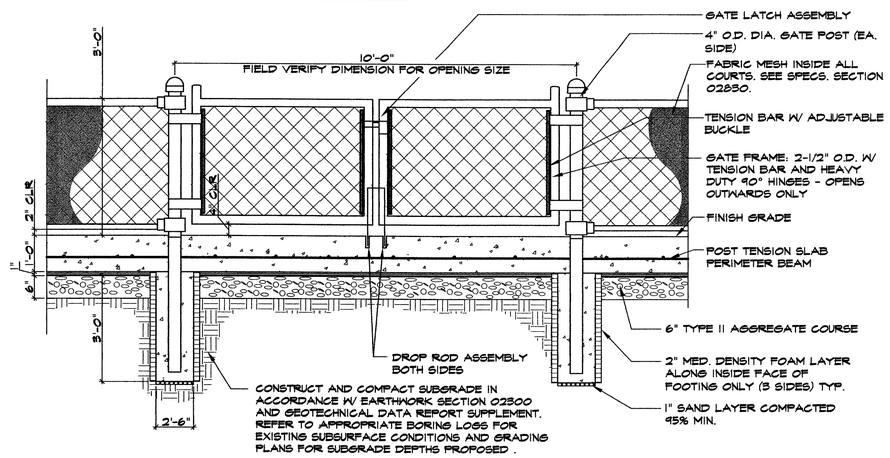

1 TENNIS COURT SERVICE GATES

NTS

SHOP DRAWING REQUIRED

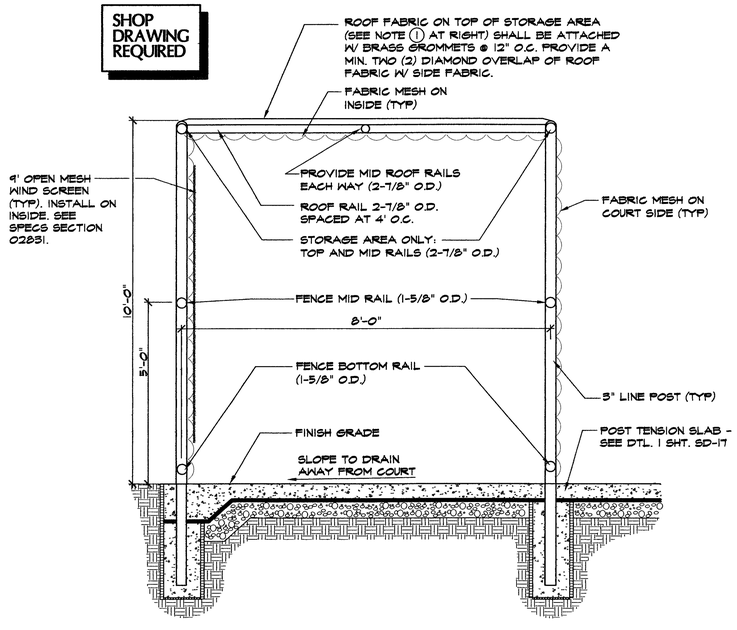

A SECTION NTS

NOTES FOR STORAGE AREA:

1. ROOF FABRIC: NJP SPORTS #1230 "OPEN MESH" BLACK SEAMLESS POLYPROPYLENE FABRIC WITH #1230 & #1231 REINFORCING TABS & TAPE SIZED BY SUPPLIER TO FIT ROOF AREA. ATTACH WITH 3 GA. COPPER COATED HOG RINGS AROUND PERIMETER, AND 9 GA. RINGS FOR CENTER STRIP ON FABRIC. SUPPLIER: NJP SPORTS INC., 800-773-4657.
2. ALL EXPOSED BOLTS ON BRACKETS AT TOP & MID RAILS SHALL BE CUT FLUSH W/ NUTS & GROUND SMOOTH (TYP).
3. ALL ROOF RAILS & TOP RAILS OF STORAGE AREA SHALL BE FIELD WELDED TOGETHER TO FENCES. ALL WELDS SHALL BE CLEAN, CONTINUOUS, GROUND SMOOTH AND ZINC COATED.

NOTES:
1. ALL CHAIN LINK GATES, POSTS, PLATES, AND FRAMES SHALL BE PRIMED AND PAINTED PER SECTION 02830.
2. ALL WELDS SHALL ON FRAME AND PICKETS SHALL BE CONTINUOUS AND GRIND WELDS SMOOTH.
3. PROVIDE ALL POSTS & GATE END FRAMES. WELD STEEL CAPS ENDS.
4. SHOP DRAWINGS SHALL SHOW ALL CONNECTIONS & WELDS.

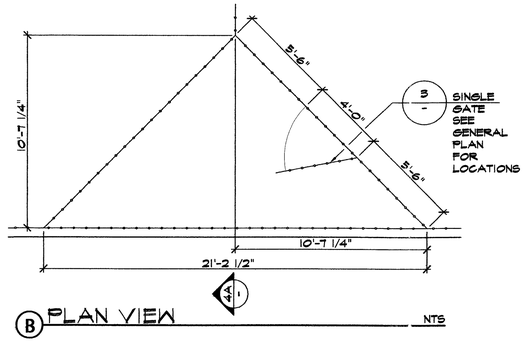

B PLAN VIEW NTS

4 DOUBLE TENNIS COURT STORAGE AREA

79257

NTS

SHOP DRAWING REQUIRED

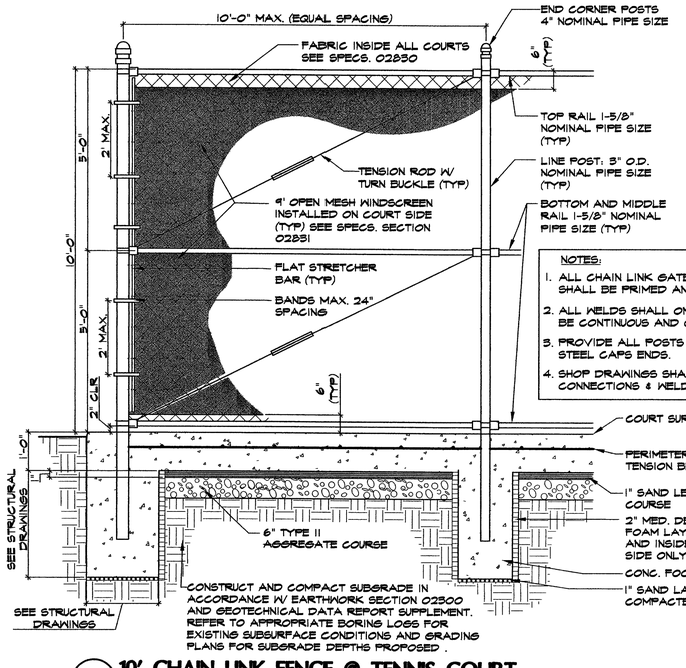

NOTES:
1. ALL CHAIN LINK GATES, POSTS, PLATES, AND FRAMES SHALL BE PRIMED AND PAINTED PER SECTION 02830.
2. ALL WELDS SHALL ON FRAME AND PICKETS SHALL BE CONTINUOUS AND GRIND WELDS SMOOTH.
3. PROVIDE ALL POSTS & GATE END FRAMES. WELD STEEL CAPS ENDS.
4. SHOP DRAWINGS SHALL SHOW ALL CONNECTIONS & WELDS.

2 10' CHAIN LINK FENCE @ TENNIS COURT

NTS

DEPARTMENT OF PUBLIC WORKS

CITY OF LAS VEGAS NEVADA

REVISIONS

CONSULTANT

Stantec
7251 W. CHARLESTON BLVD.
LAS VEGAS, NEVADA 89117
PHONE (702) 258-0115
FAX (702) 869-8547

WASHINGTON BUFFALO PARK - PHASE 1A
WASHINGTON & BUFFALO, LAS VEGAS, NV

SITE DETAILS

STAMP

OWNER: CITY OF LAS VEGAS
DEPARTMENT OF PUBLIC WORKS
ARCHITECTURAL SERVICES
400 EAST STEWART AVENUE
LAS VEGAS, NEVADA 89101
PHONE: (702) 229-6535
FAX: (702) 382-3232
TDD: (702) 386-9108

DRAWN	KJC
FILE	2866SD-16.dwg
DATE	7/03
SCALE	NTS
BID NO	03-534108
CLV DWG NO	650.76-1A
	100% SUBMITTAL
SHT NO	SD-16

DRAWINGS AS INSTRUMENTS OF SERVICE ARE THE PROPERTY OF THE DESIGN PROFESSIONAL, WHOSE STAMP OF CERTIFICATION APPEARS ON THE DRAWINGS AND SPECIFICATIONS. ANY USE OR REPRODUCTION IN WHOLE OR IN PART WITHOUT WRITTEN CONSENT IS STRICTLY PROHIBITED. COPIES OF THE DRAWINGS AND SPECIFICATIONS RETAINED BY THE CLIENT MAY BE UTILIZED ONLY FOR COMPLETING THE PROJECT FOR WHICH THEY WERE PREPARED AND NOT FOR THE CONSTRUCTION OF ANY OTHER PROJECT IN A C 653.780