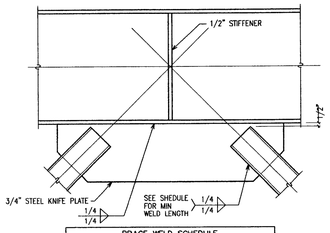

BRACE WELD SCHEDULE			
BRACE	WELD LENGTH	BRACE	WELD LENGTH
TS3x3	4-1/2"	TS6x6	9"
TS4x4	6"	TS7x7	10-1/2"
TS5x5	7-1/2"	TS8x8	12"

STEEL BRACE AT STEEL BEAM NO SCALE 20

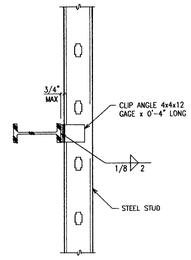

STEEL STUD AT STEEL BEAM NO SCALE 16

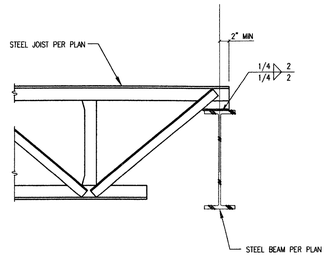

STEEL JOIST AT STEEL BEAM NO SCALE 12

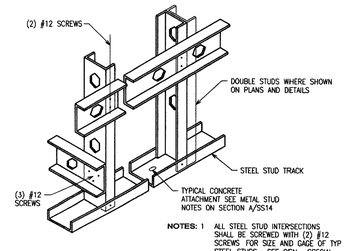

NOTES: 1 ALL STEEL STUD INTERSECTIONS SHALL BE SCREWED WITH (2) #12 SCREWS FOR SIZE AND GAGE OF TYP STEEL STUDS , SEE GSN SPECIAL SIZES ARE CALLED OUT IN DETAILS

2 STUDS SHALL BE SPACED AT 16" O.C. TYPICAL

TYPICAL STEEL STUD ATTACHMENT NO SCALE 8

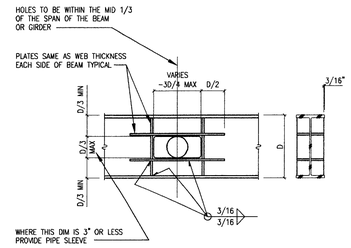

HOLE IN STEEL BEAM WEB NO SCALE 4

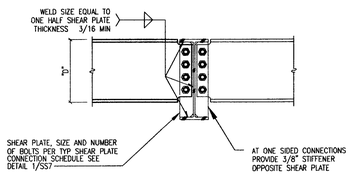

STEEL BEAM AT STEEL BEAM NO SCALE 19

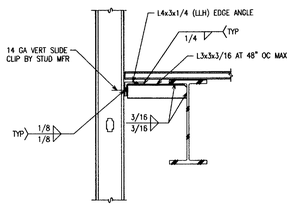

NOTE: 1 SEE ARCH'L FOR STEEL STUD WALL INFO

2 BLOCKING BETWEEN JOISTS, ADJOINING FRAMING, ETC NOT SHOWN FOR CLARITY

STEEL STUD WALL AT STEEL BEAM NO SCALE 15

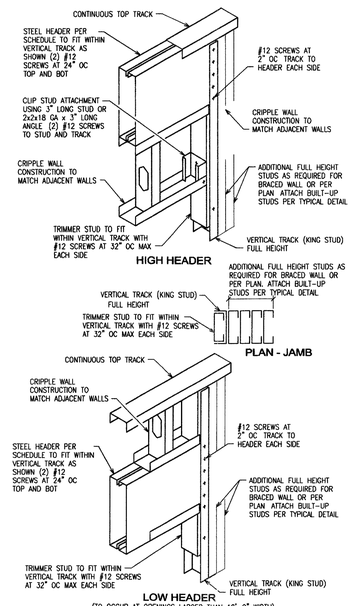

NOTES 1 HEADER MAY BE CONSTRUCTED HIGH OR LOW LOW HEADER REQUIRED AT OPENING 10' OR LARGER

2 ALTERNATE WELDED CONNECTION ACCEPTABLE USING 3/8" LONG FILLET WELD FOR EACH SCREW NOTED

STEEL STUDS HEADER SCHEDULE

HEADER SPAN	STUD MARK	Fy (KSI)	REMARKS
UP TO 6'-0"	600S162-54	50	WEB STIFFNERS REQUIRED AT EACH SUPPORT
FROM 6'-0" TO 10'-0"	600S162-54	50	WEB STIFFNERS REQUIRED AT EACH SUPPORT
FROM 10'-0" TO 16'-0"	1200S200-68	50	WEB STIFFNERS REQUIRED AT EACH SUPPORT AND EVERY 24"OC

TYPICAL HEADER CONSTRUCTION NO SCALE 10

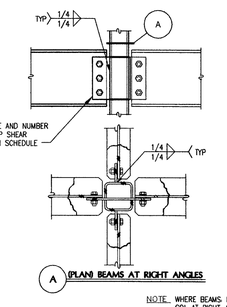

NOTE WHERE BEAMS FRAME INTO COL AT RIGHT ANGLES, USE KNIFE PLATE AT LARGER BEAM AND FACE-MOUNTED SHEAR PLATE AT SMALLER BEAM

STEEL BEAM AT STEEL COLUMN NO SCALE 7

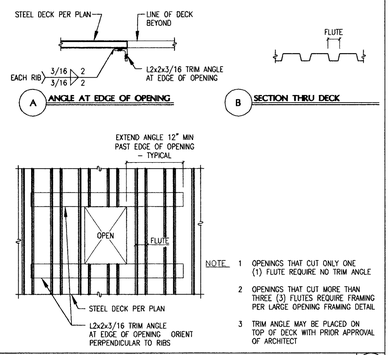

NOTE 1 OPENINGS THAT CUT ONLY ONE (1) FLUTE REQUIRE NO TRIM ANGLE

2 OPENINGS THAT CUT MORE THAN THREE (3) FLUTES REQUIRE FRAMING PER LARGE OPENING FRAMING DETAIL

3 TRIM ANGLE MAY BE PLACED ON TOP OF DECK WITH PRIOR APPROVAL OF ARCHITECT

SMALL OPENING THRU STEEL DECK NO SCALE 3

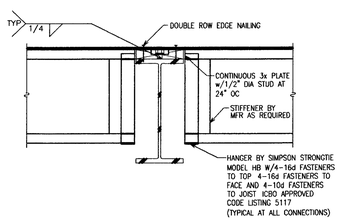

PREFAB. JOIST @ STEEL BEAM NO SCALE 18

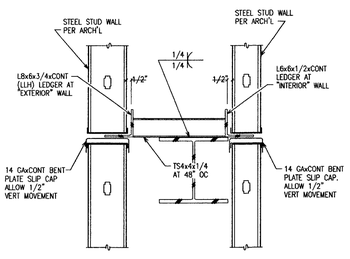

STEEL STUD WALL AT STEEL BEAM NO SCALE 14

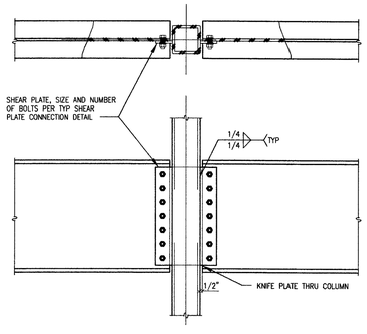

STEEL BEAM AT STEEL COLUMN NO SCALE 6

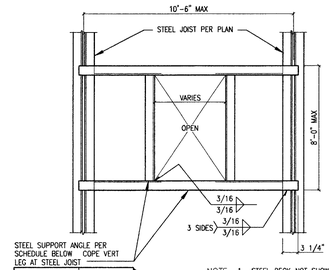

ANGLE LENGTH	ANGLE SIZE
UP TO 6'-0"	L4x3x1/4(LLV)
6'-1" TO 8'-0"	L4x3x1/4(LLV)
8'-1" TO 10'-6"	L5x3x1/4(LLV)

NOTE 1 STEEL DECK NOT SHOWN FOR CLARITY

2 VERIFY LOCATION AND SIZE OF OPENING WITH ARCH'L AND MECH

3 FOR SMALL OPENINGS, SEE TYP SMALL OPENING IN STEEL DECK DETAIL

LARGE OPENING IN ROOF FRAMING NO SCALE 2

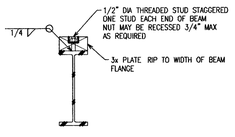

NOTE FRAMING ABOVE NOT SHOWN FOR CLARITY

TYPICAL WOOD PLATE @ STEEL BEAM NO SCALE 17

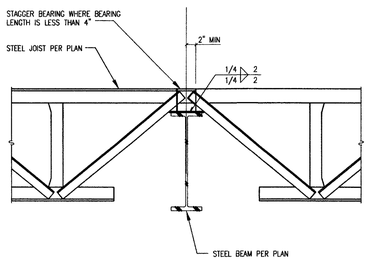

STEEL JOIST AT STEEL BEAM NO SCALE 13

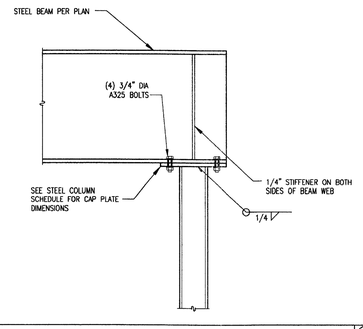

STEEL BEAM AT STEEL COLUMN NO SCALE 9

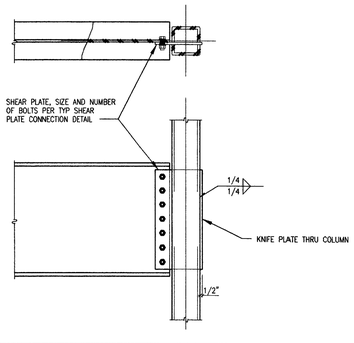

STEEL BEAM AT STEEL COLUMN NO SCALE 5

NOMINAL BEAM DEPTH "D"	NUMBER OF BOLTS IN ROW
UP TO 7"	2
8" TO 10"	2
12" TO 14"	3
16"	4
18"	5
21"	6
24" TO 27"	7
30"	8
33" TO 35"	9
36"	10

NOTE 1 TYPICAL CONNECTION CONSISTS OF ONE SHEAR PLATE WITH 3/4" DIA BOLTS A325 WHERE "D" = 27" OR GREATER, SEE GSN FOR BOLT MATERIAL SPECIFICATION

2 MAINTAIN BOLT SPACING AND EDGE DISTANCES PER AISC SPECIFICATIONS

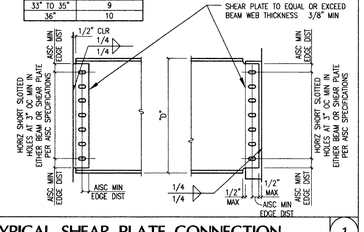

TYPICAL SHEAR PLATE CONNECTION NO SCALE 1

79280

DEPARTMENT OF PUBLIC WORKS

CITY OF LAS VEGAS NEVADA

REVISIONS

CONSULTANT

7251 W CHARLESTON BLVD
LAS VEGAS, NEVADA 89117
PHONE (702) 258-0115
FAX (702) 258-4956
Stantec

WASHINGTON BUFFALO PARK - PHASE 1A
WASHINGTON & BUFFALO, LAS VEGAS, NV

FRAMING DETAILS

STAMP

OWNER: CITY OF LAS VEGAS
DEPARTMENT OF PUBLIC WORKS
ARCHITECTURAL SERVICES

400 EAST STEWART AVENUE
LAS VEGAS, NEVADA 89101
PHONE: (702) 229-6535
FAX: (702) 382-3232
TDD: (702) 386-9108

DRAWN	BT
FILE	2186-S67.dwg
DATE	7/03
SCALE	NOTED
BID NO	03TB34108
CLV DWG NO	65076-1A
	100% SUBMITTAL
SHT NO	SS7

DRAWINGS AS INSTRUMENTS OF SERVICE ARE THE PROPERTY OF THE DESIGN PROFESSIONAL WHOSE STAMP OF CERTIFICATION APPEARS ON THE DRAWINGS AND SPECIFICATIONS AND USE OR REPRODUCTION IN WHOLE OR IN PART WITHOUT WRITTEN CONSENT IS STRICTLY PROHIBITED COPIES OF THE DRAWINGS AND SPECIFICATIONS RETAINED BY THE CLIENT MAY BE UTILIZED ONLY FOR OCCUPYING THE PROJECT FOR WHICH THEY WERE PREPARED AND NOT FOR THE CONSTRUCTION OF ANY OTHER PROJECT N.A.C. 623.280