NOTE:

SHADE SAILS SYSTEM AND STRUCTURES SHOWN REPRESENT DESIGN INTENT ONLY FOR BIDDING. AFTER AWARD OF BID, CONTRACTOR SHALL BE REQUIRED TO SUBMIT PRELIMINARY SHOP DRAWINGS WITH DIMENSIONS, ELEVATIONS, MATERIALS, AND METHODS PROPOSED TO CONSTRUCTION PROJECT REPRESENTATIVE FOR REVIEW. AFTER REVIEWS, CONTRACTOR SHALL PREPARE FINAL SHOP DRAWINGS & CALCULATIONS TO CITY BUILDING DEPT. AS A DEFFERED SUBMITTAL. (SEE DEFERRED SUBMITTAL REQUIREMENT BELOW.)

DEFERRED SUBMITTAL PLAN NOT REVIEWED BY BUILDING DEPT.

DEFERRED SUBMITTAL REQUIREMENT

THESE DRAWING REPRESENT DESIGN INTENT ONLY. UPON REVIEW OF SHOP DWGS, CONTRACTOR SHALL SUPPLY SHOP DRAWINGS WITH FOUNDATIONS AND STRUCTURAL CALCULATIONS, INCLUDING MATERIALS AND CONNECTIONS, WET-SEALED AND SIGNED BY A NEVADA REGISTERED PROFESSIONAL ENGINEER. CONTRACTOR IS REQUIRED TO SUBMIT TO THE CITY BUILDING DEPARTMENT FOR REVIEW AND APPROVAL BEFORE PERMITS AND INSPECTIONS CAN BE SCHEDULED. (MIN. 3 COPIES TO BUILDING DEPT.) ALL COST ASSOCIATED WITH PERMITTING BY BUILDING DEPT.TO BE PAID FOR BY CONTRACTOR.

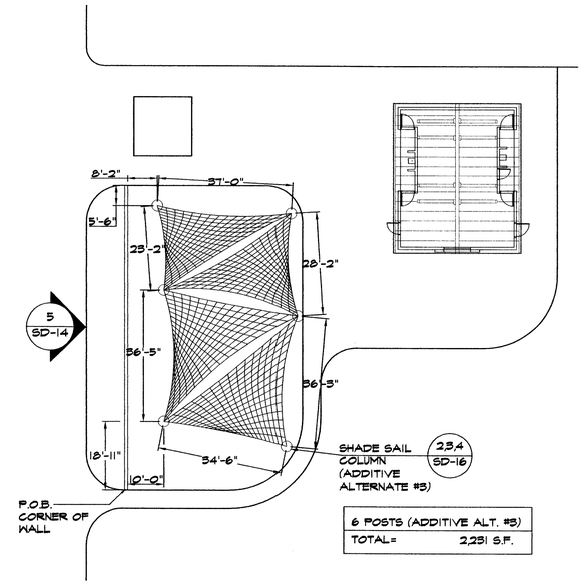

6 POSTS (ADDITIVE ALT. #3)	
TOTAL=	2,231 S.F.

1 EAST TOTLOT SHADE SAIL PLAN

ADDITIVE ALTERNATE #3 — 1" = 10'-0"

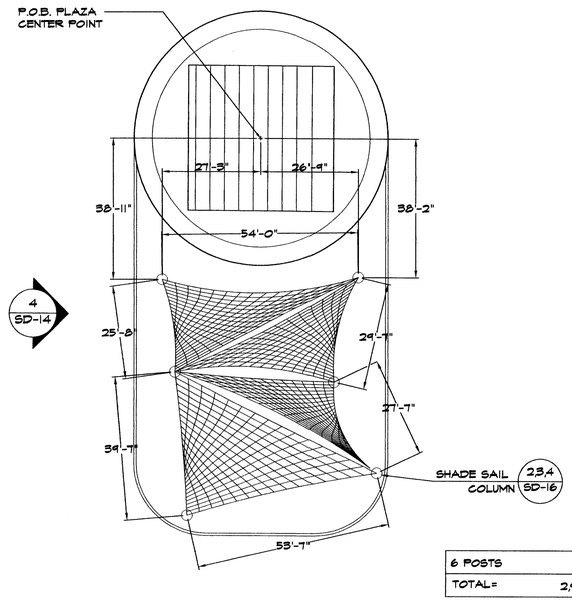

6 POSTS	
TOTAL=	2,906 S.F.

2 CENTRAL TOTLOT SHADE SAIL PLAN

(BASE BID) — 1" = 10'-0"

75339

CITY OF LAS VEGAS NEVADA

REVISIONS

CONSULTANT

7251 W. CHARLESTON BLVD
LAS VEGAS, NEVADA 89117
PHONE (702) 258-0115
FAX (702) 258-4956
Stantec

DEPARTMENT OF PUBLIC WORKS

WASHINGTON BUFFALO PARK - PHASE IB
WASHINGTON & BUFFALO, LAS VEGAS, NV

SITE DETAILS

STAMP

OWNER: CITY OF LAS VEGAS
DEPARTMENT OF PUBLIC WORKS
ARCHITECTURAL SERVICES

400 EAST STEWART AVENUE
LAS VEGAS, NEVADA 89101
PHONE: (702) 229-8535
FAX: (702) 382-8232
TDD: (702) 386-9108

DRAWN	KUC
TITLE	21866SD-15, SD-16.dwg
DATE	7/03
SCALE	NTS
TED NO	03.5341.08
CLV DWG NO	650.16-13
	100% SUBMITTAL
SHT NO	SD-15

DRAWINGS AS INSTRUMENTS OF SERVICE ARE THE PROPERTY OF THE DESIGN PROFESSIONAL WHOSE STAMP OF CERTIFICATION APPEARS ON THE DRAWINGS AND SPECIFICATIONS. ANY USE OR REPRODUCTION IN WHOLE OR IN PART WITHOUT WRITTEN CONSENT IS STRICTLY PROHIBITED. COPIES OF THE DRAWINGS AND SPECIFICATIONS RETAINED BY THE CLVDPW MAY BE UTILIZED ONLY FOR OCCUPYING THE PROJECT FOR WHICH THEY WERE PREPARED AND NOT FOR THE CONSTRUCTION OF ANY OTHER PROJECT. K.J.C. 633-780