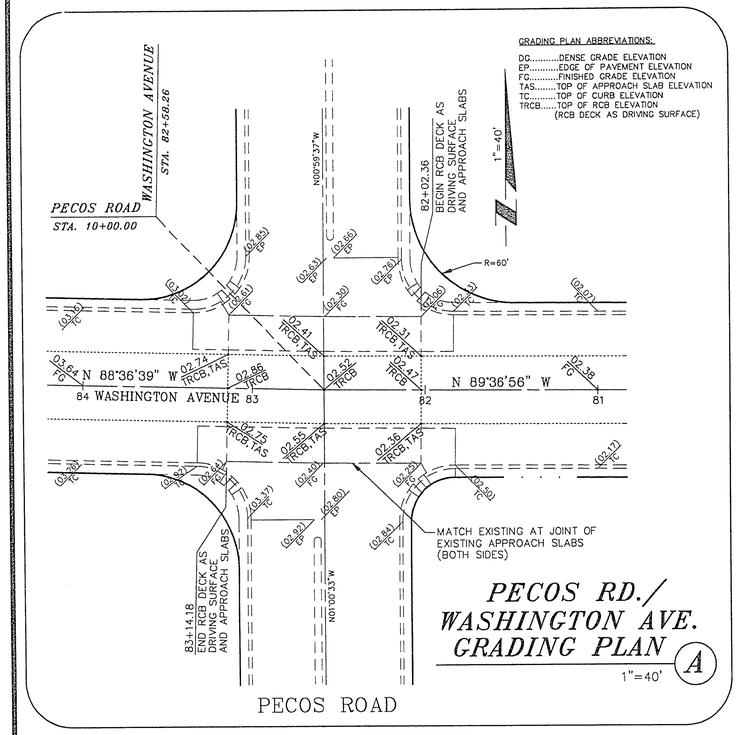

PECOS RD./ WASHINGTON AVE. GRADING PLAN (A)

1"=40'

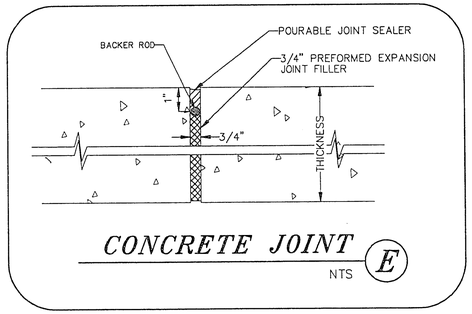

CONCRETE JOINT (E)

NTS

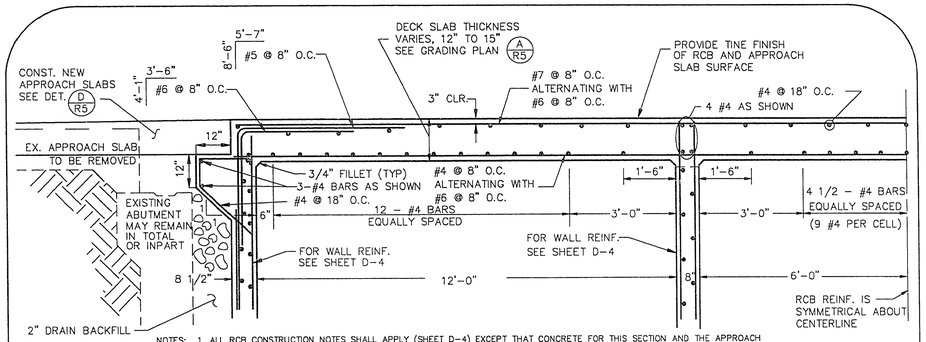

NOTES;
1. ALL RCB CONSTRUCTION NOTES SHALL APPLY (SHEET D-4) EXCEPT THAT CONCRETE FOR THIS SECTION AND THE APPROACH SLABS SHALL BE MODIFIED CLASS DA WITH ACCELERATOR TO OBTAIN A MINIMUM COMPRESSIVE STRENGTH OF 4000 PSI IN 4 DAYS.
2. ELECTRICAL CONDUIT IS TO BE INSTALLED THROUGH THE RCB DECK SLAB IN SEVERAL LOCATIONS. SEE ELECTRICAL DRAWINGS.
3. PRESERVE EXISTING 10" SEWER UNDER RCB, SEE DETAIL H R5

RCB DECK SLAB AS DRIVING SURFACE (F)

STA. 82+02.36 TO 83+14.18

NTS

NOTE:
1. WHERE SIGN LOCATIONS INDICATED ARE 20' OR LESS FROM AN EXISTING STREETLIGHT STANDARD, THE SIGN SHALL BE MOUNTED ON THE EXISTING STREETLIGHT STANDARD, USING ACCEPTABLE HARDWARE.
2. SIGN PLACEMENT SHALL BE IN CONFORMANCE WITH THE MUTCD.

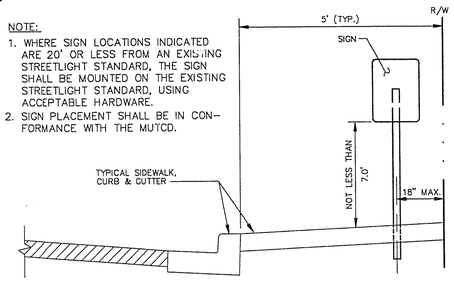

TYPICAL PERMANENT SIGN PLACEMENT (C)

NTS

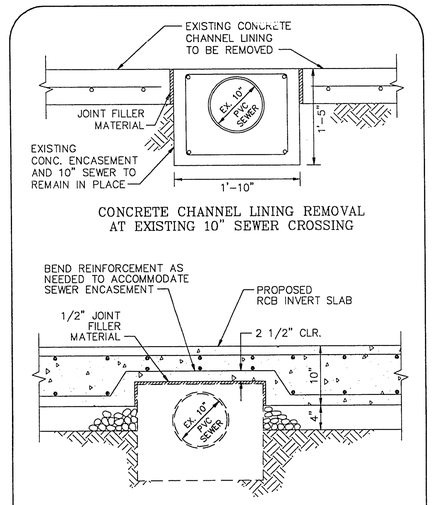

CONCRETE CHANNEL LINING REMOVAL AT EXISTING 10" SEWER CROSSING

PRESERVATION OF 10" SEWER (H)

NTS

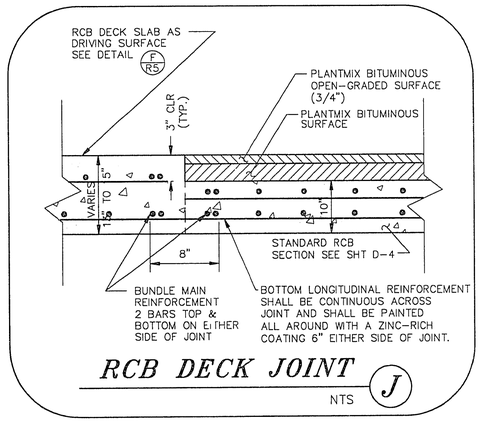

RCB DECK JOINT (J)

NTS

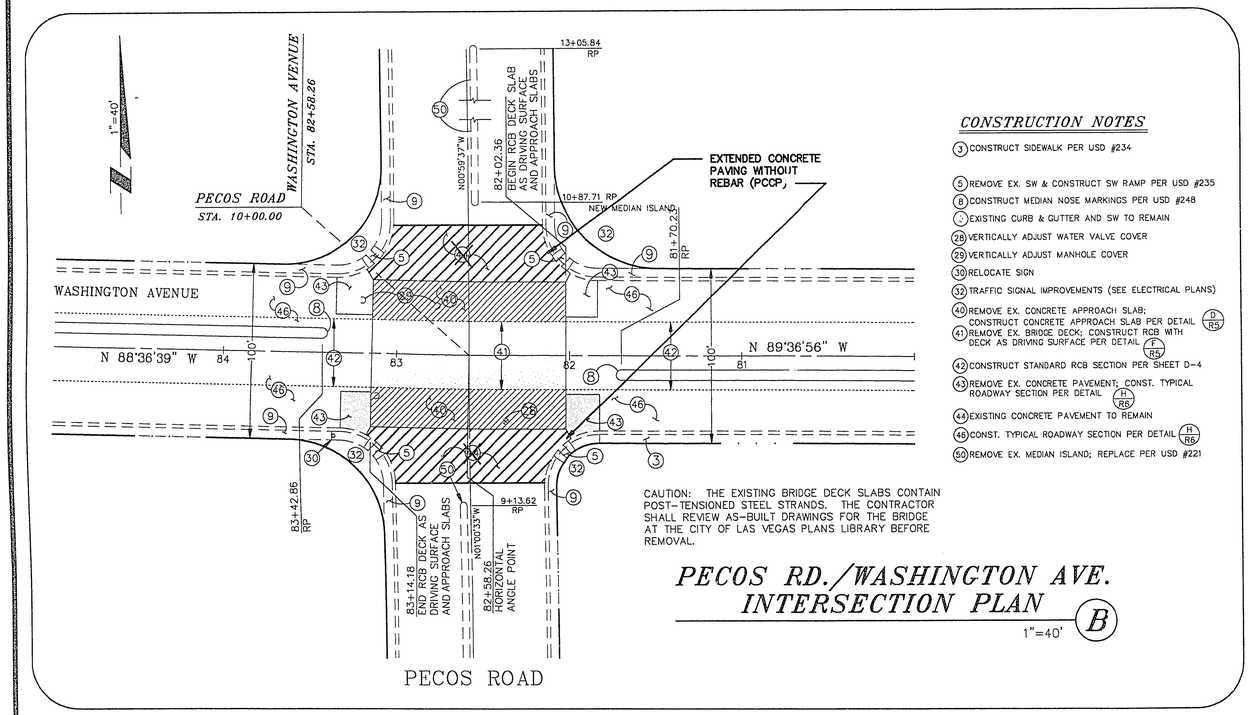

CAUTION: THE EXISTING BRIDGE DECK SLABS CONTAIN POST-TENSIONED STEEL STRANDS. THE CONTRACTOR SHALL REVIEW AS-BUILT DRAWINGS FOR THE BRIDGE AT THE CITY OF LAS VEGAS PLANS LIBRARY BEFORE REMOVAL.

PECOS RD./WASHINGTON AVE. INTERSECTION PLAN (B)

1"=40'

CONSTRUCTION NOTES

(3) CONSTRUCT SIDEWALK PER USD #234
(5) REMOVE EX. SW & CONSTRUCT SW RAMP PER USD #235
(8) CONSTRUCT MEDIAN NOSE MARKINGS PER USD #248
(9) EXISTING CURB & GUTTER AND SW TO REMAIN
(28) VERTICALLY ADJUST WATER VALVE COVER
(29) VERTICALLY ADJUST MANHOLE COVER
(30) RELOCATE SIGN
(32) TRAFFIC SIGNAL IMPROVEMENTS (SEE ELECTRICAL PLANS)
(40) REMOVE EX. CONCRETE APPROACH SLAB; CONSTRUCT CONCRETE APPROACH SLAB PER DETAIL D R5
(41) REMOVE EX. BRIDGE DECK; CONSTRUCT RCB WITH DECK AS DRIVING SURFACE PER DETAIL F R5
(42) CONSTRUCT STANDARD RCB SECTION PER SHEET D-4
(43) REMOVE EX. CONCRETE PAVEMENT; CONST. TYPICAL ROADWAY SECTION PER DETAIL H R6
(44) EXISTING CONCRETE PAVEMENT TO REMAIN
(46) CONST. TYPICAL ROADWAY SECTION PER DETAIL H R6
(50) REMOVE EX. MEDIAN ISLAND; REPLACE PER USD #221

Avoid cutting underground utility lines. It's costly.
Call before you Dig.
1-800-227-2600
UNDERGROUND SERVICE ALERT (USA)

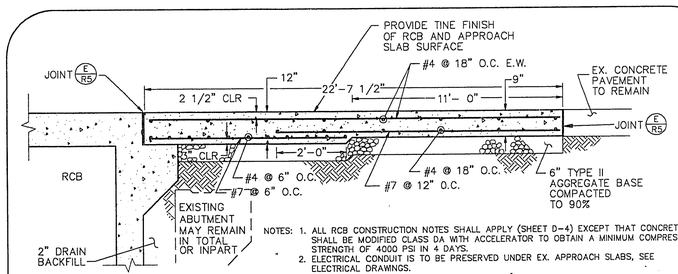

NOTES:
1. ALL RCB CONSTRUCTION NOTES SHALL APPLY (SHEET D-4) EXCEPT THAT CONCRETE SHALL BE MODIFIED CLASS DA WITH ACCELERATOR TO OBTAIN A MINIMUM COMPRESSIVE STRENGTH OF 4000 PSI IN 4 DAYS.
2. ELECTRICAL CONDUIT IS TO BE PRESERVED UNDER EX. APPROACH SLABS, SEE ELECTRICAL DRAWINGS.

APPROACH SLAB (D)

NTS

RECORD DRAWING

These Record Drawings have been prepared based on information provided by others. The Engineer has not verified the accuracy of such information and shall not be responsible for any errors or omissions which may be incorporated herein as a result.

No.	Date		CHKD	APPD

REVISIONS

DESIGNED: BB
DRAWN: BB
CHECKED: LHG
JOB NO. 393-91-2
SCALE: HORIZ. AS NOTED
VERT. AS NOTED

1055 EAST TROPICANA
SUITE 800
LAS VEGAS, NEVADA 89119
(702)798-1007
CONSULTING ENGINEERS

PROJECT: CITY OF LAS VEGAS
WASHINGTON AVENUE CONVEYANCE SYSTEM

DESCRIPTION: PECOS ROAD/WASHINGTON AVENUE
INTERSECTION DETAILS

SHEET R-5
18 OF 23