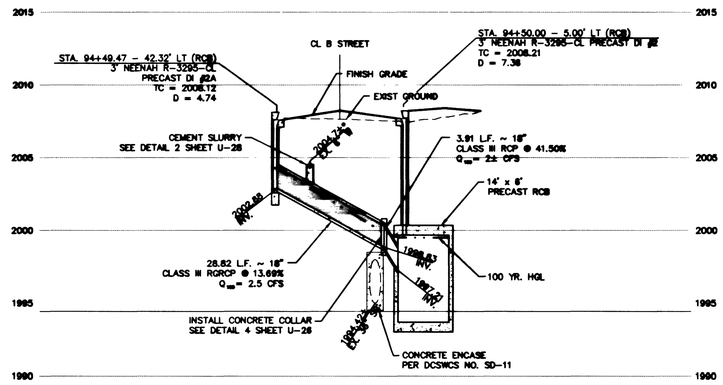

STA 94+49.72 - RCB

STORM DRAIN LATERAL PROFILE — SCALE: HORIZ. 1" = 20' VERT. 1" = 5' — 45

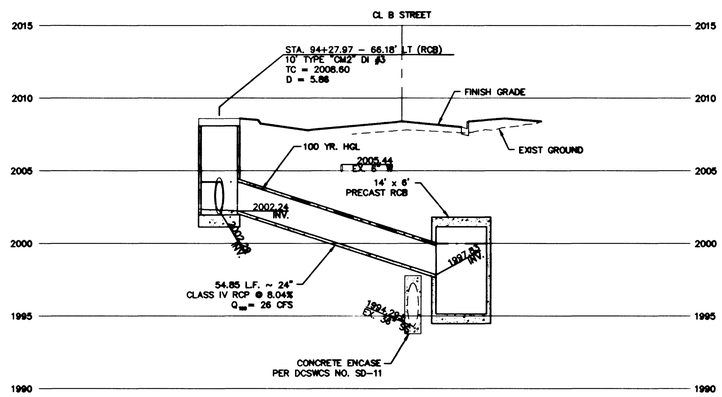

STA 94+26.30 - RCB

STORM DRAIN LATERAL PROFILE — SCALE: HORIZ. 1" = 20' VERT. 1" = 5' — 44

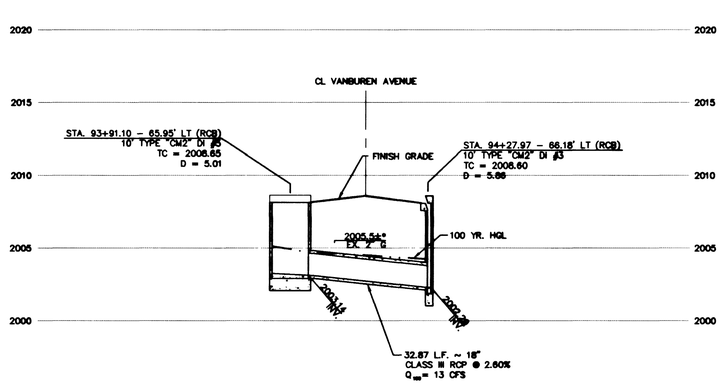

STA 93+91.10 - RCB

STORM DRAIN LATERAL PROFILE — SCALE: HORIZ. 1" = 20' VERT. 1" = 5' — 43

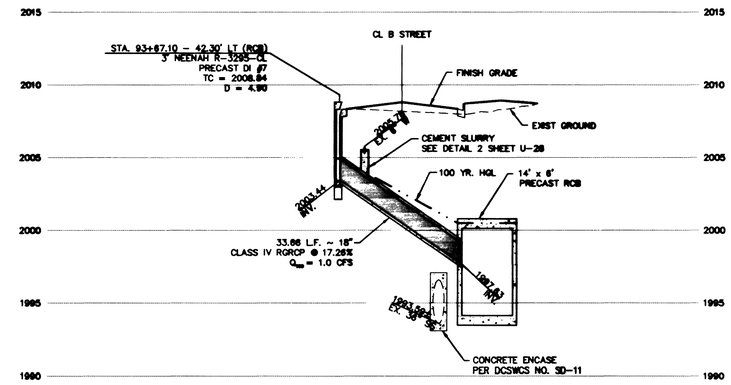

STA 93+66.85 - RCB

STORM DRAIN LATERAL PROFILE — SCALE: HORIZ. 1" = 20' VERT. 1" = 5' — 42

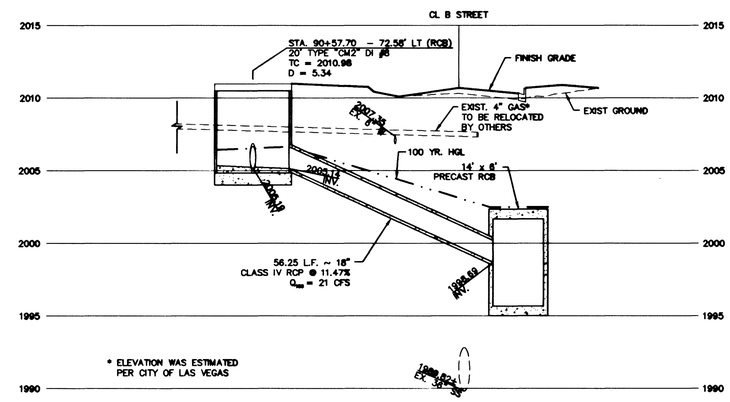

STA 90+56.03 - RCB

STORM DRAIN LATERAL PROFILE — SCALE: HORIZ. 1" = 20' VERT. 1" = 5' — 41

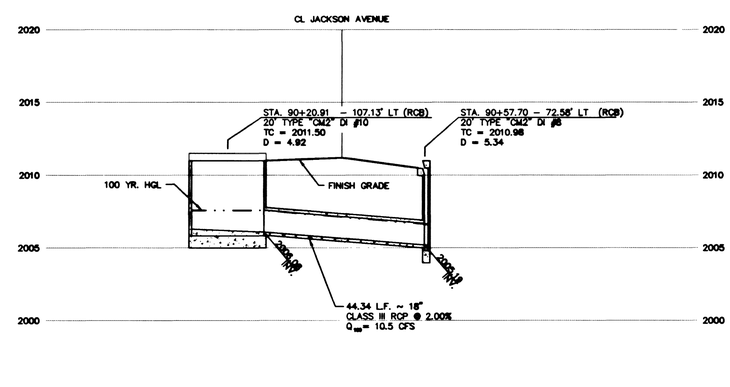

STA 90+20.91 - RCB

STORM DRAIN LATERAL PROFILE — SCALE: HORIZ. 1" = 20' VERT. 1" = 5' — 40

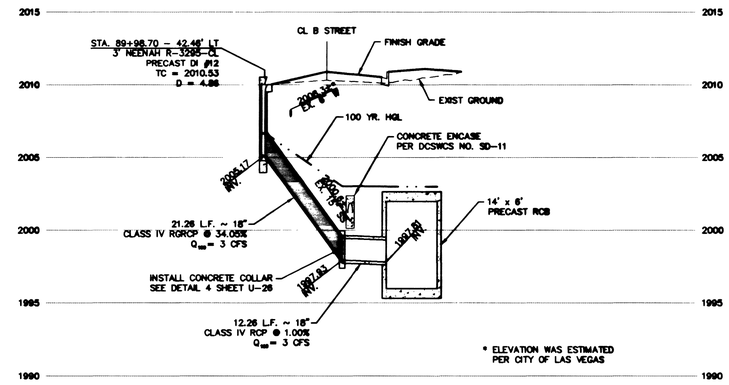

STA 89+98.45 - RCB

STORM DRAIN LATERAL PROFILE — SCALE: HORIZ. 1" = 20' VERT. 1" = 5' — 39

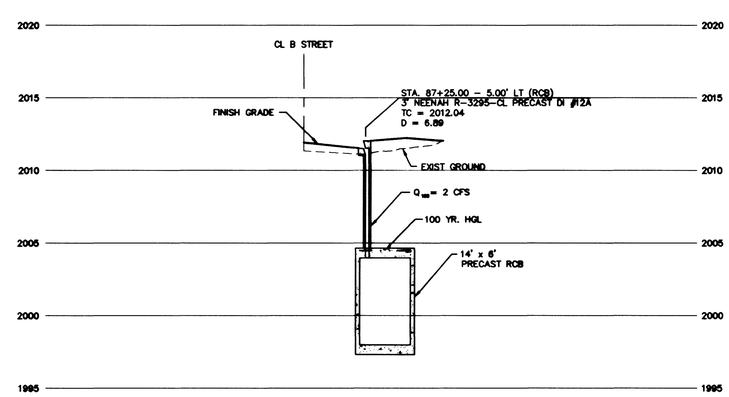

STA 87+25.00 - RCB

STORM DRAIN LATERAL PROFILE — SCALE: HORIZ. 1" = 20' VERT. 1" = 5' — 38

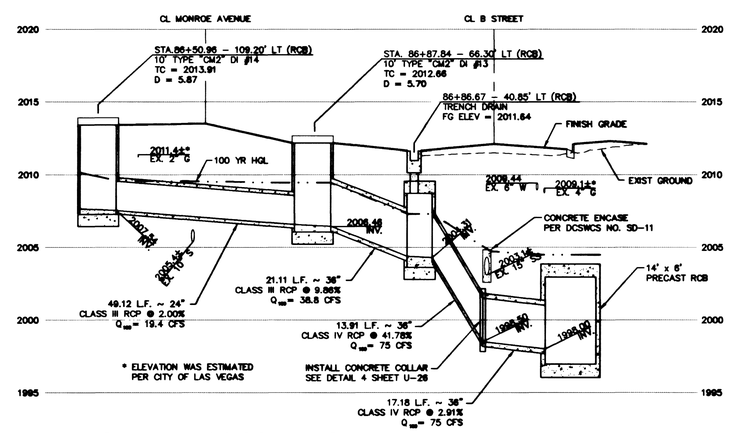

STA 87+06.22 - RCB

STORM DRAIN LATERAL PROFILE — SCALE: HORIZ. 1" = 20' VERT. 1" = 5' — 37

Bonnie Clift — LAS VEGAS VALLEY WATER DISTRICT — DATE 8-17-00

NO.	DESCRIPTION	DATE	APP'D

DATE :	02/10/00
PM :	MW/BT
DRAWN BY :	JRL/W.TA
DESIGNED BY :	JL.BT
CHECKED BY :	JL.BT
ADA CHECKED :	
JOB NO. :	0133.0141
SCALE :	AS SHOWN

PENTACORE
CIVIL ENGINEERING • LAND SURVEYING • PLANNING
CONSTRUCTION MANAGEMENT • ADA CONSULTING
6763 WEST CHARLESTON BOULEVARD
LAS VEGAS, NEVADA 89146 (702)258-0115

CITY OF LAS VEGAS
WASHINGTON AVENUE
STORM DRAIN LATERAL PROFILES - 5

PROFESSIONAL ENGINEER-STATE OF NEVADA — MYRON R. WELLS — No. 2646 — 8/25/00

SHEET 44
U-13
OF 59

DWG. NO. 107-V3119

Q:\0133\0140\NEWDWGS\UTILITY\SDLAT-4.DWG
Q:\0133\0140\New dwgs\Utility\Sdlat-5.dwg Mon Jul 24 16:19:24 2000 RAT

26816