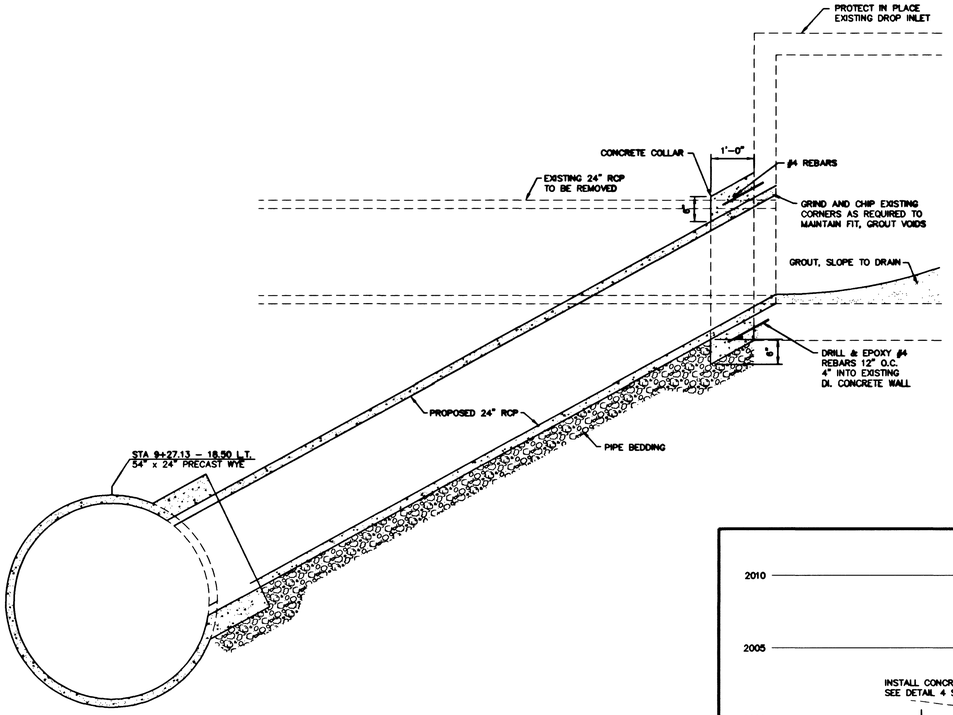

SECTION A

SCALE: NONE

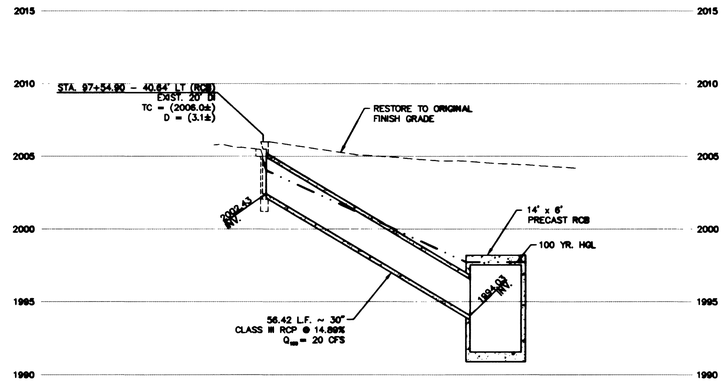

STA 97+83.51 - RCB

STORM DRAIN LATERAL PROFILE

SCALE: HORIZ. 1" = 20'
VERT. 1" = 5'

(48)

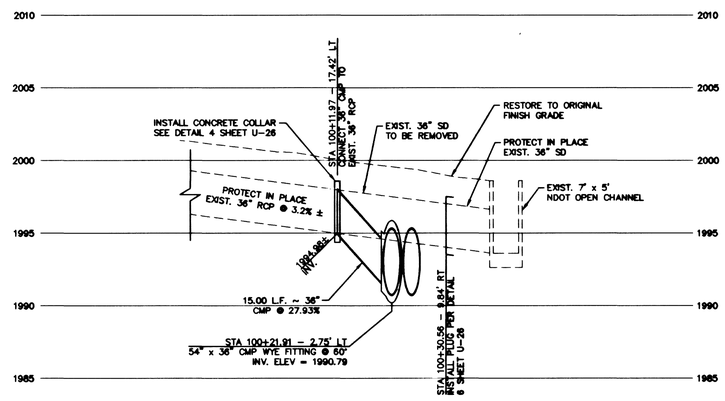

STA 100+05.42 - RCB

STORM DRAIN LATERAL PROFILE

SCALE: HORIZ. 1" = 20'
VERT. 1" = 5'

(50)

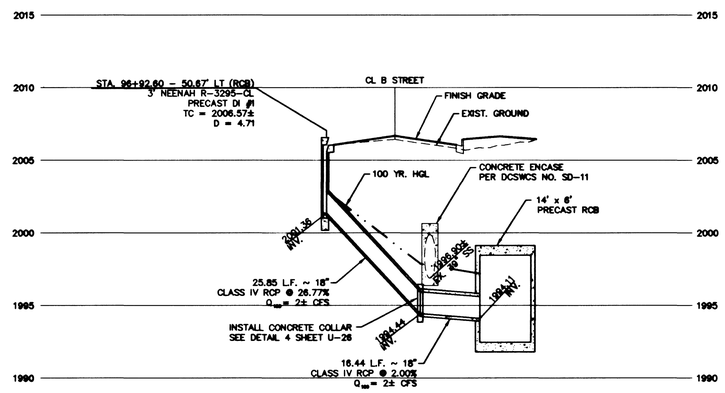

STA 96+93.87 - RCB

STORM DRAIN LATERAL PROFILE

SCALE: HORIZ. 1" = 20'
VERT. 1" = 5'

(47)

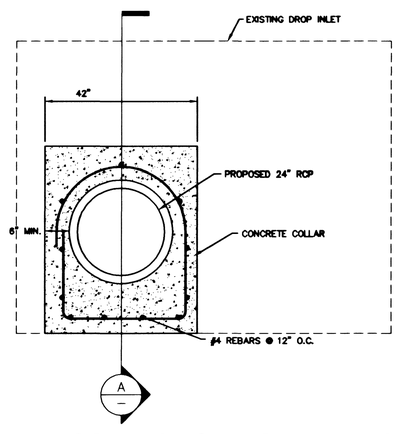

PIPE CONNECTION TO EXISTING DROP INLET DETAIL

SCALE: NONE

(1)

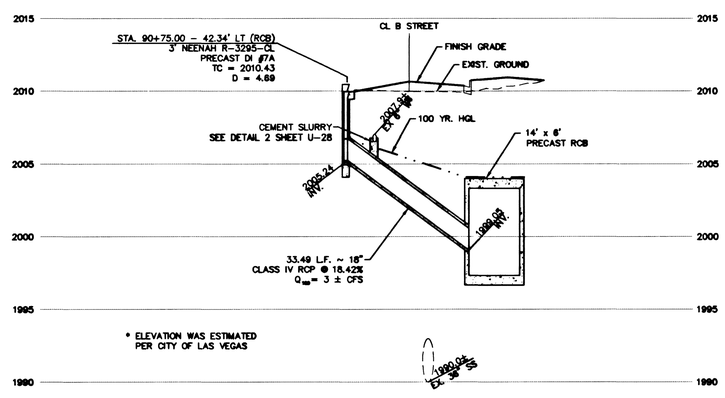

STA 90+75.00 - RCB

STORM DRAIN LATERAL PROFILE

SCALE: HORIZ. 1" = 20'
VERT. 1" = 5'

(49)

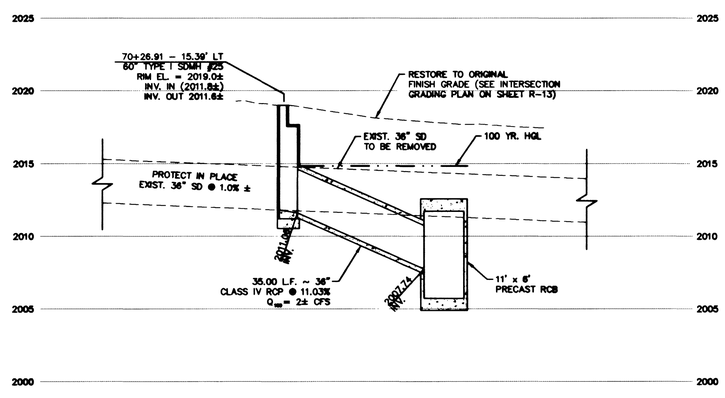

STA 70+60.62 - RCB

STORM DRAIN LATERAL PROFILE

SCALE: HORIZ. 1" = 20'
VERT. 1" = 5'

(46)

Bonnie Cliff 8-17-00
LAS VEGAS VALLEY WATER DISTRICT DATE

NO.	DESCRIPTION	DATE	APP'D

DATE :	02/10/00
PM :	MW/BT
DRAWN BY :	JR/LW/TA
DESIGNED BY :	JLBT
CHECKED BY :	JLBT
ADA CHECKED :	
JOB NO. :	0133.0141
SCALE :	AS SHOWN

PENTACORE
CIVIL ENGINEERING • LAND SURVEYING • PLANNING
CONSTRUCTION MANAGEMENT • ADA CONSULTING
6763 WEST CHARLESTON BOULEVARD
LAS VEGAS, NEVADA 89146 (702)258-0115

CITY OF LAS VEGAS
WASHINGTON AVENUE
STORM DRAIN LATERAL PROFILES – 6

PROFESSIONAL ENGINEER – STATE OF NEVADA
MYRON R. [illegible]
No. 2646
8/25/00

SHEET 45
U-14
OF 59

DWG. NO. 107-V3119

Q:\0133\0140\New dwgs\Utility\Sdlat-6TONY.dwg Mon Jul 24 16:19:50 2000 RAT

26517