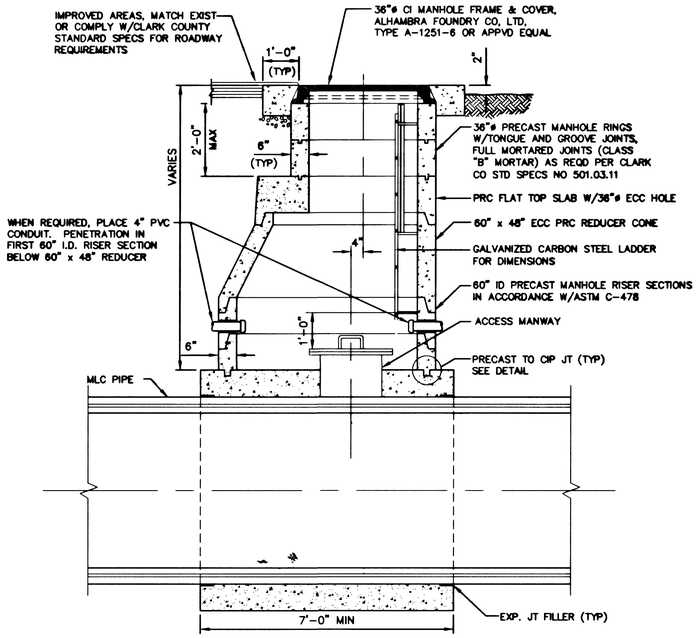

WATER MAN HOLE SECTION (5)

SCALE: NONE

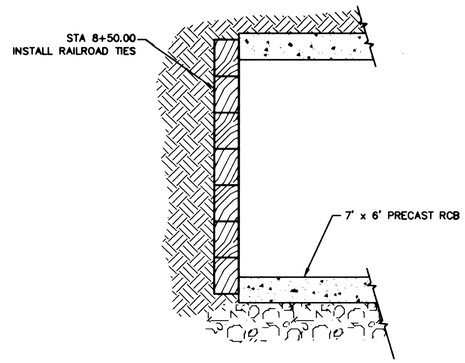

RCB PLUG DETAIL (3)

SCALE: 1/2" = 1'-0"

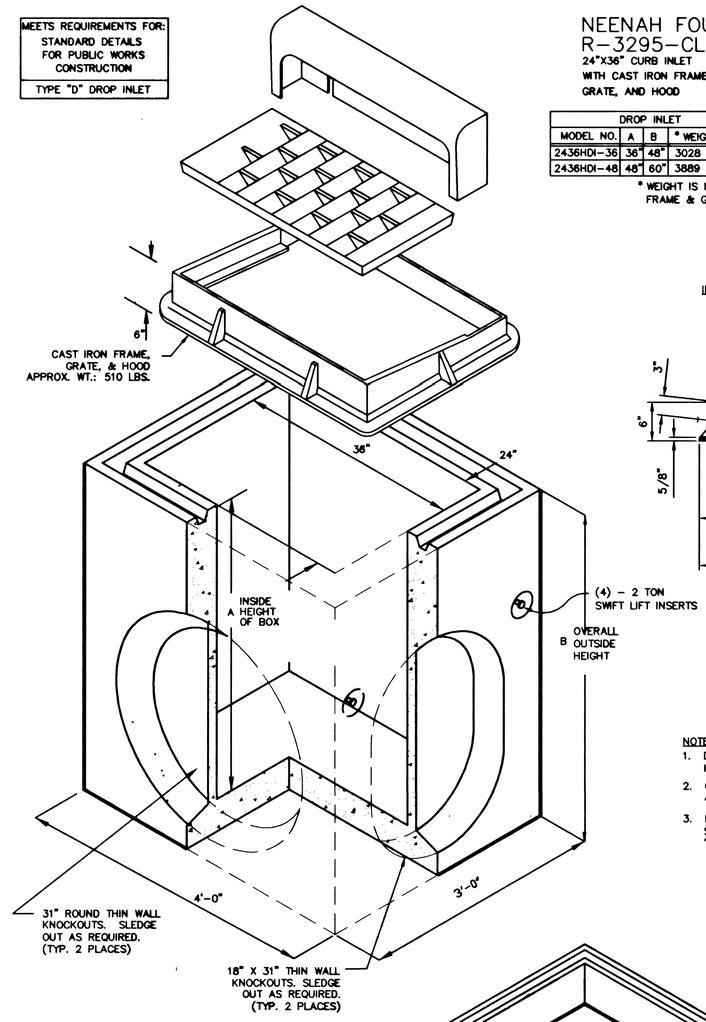

NEENAH FOUNDARY
R-3295-CL
24"X36" CURB INLET
WITH CAST IRON FRAME
GRATE, AND HOOD

DROP INLET			
MODEL NO.	A	B	* WEIGHT
2436HDI-36	36"	48"	3028 LBS.
2436HDI-48	48"	60"	3889 LBS.

* WEIGHT IS MINUS FRAME & GRATE

INLET FRAME AND GRATE DETAIL
NTS

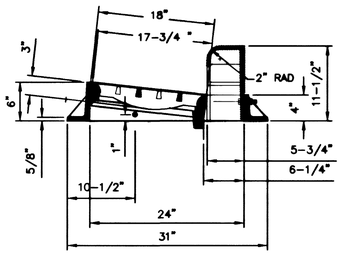

NOTES:
1. DROP INLET DESIGN LOAD: H-20 TRAFFIC, UP TO 12 FT DEPTH
2. GRATE AND FRAME DESIGN LOAD: 40,000 LB TRAFFIC LOAD
3. DROP INLET AND EXTENSION MODEL NUMBERS SHOWN ARE BY JENSEN PRECAST. SUBMIT "OR EQUAL" ALTERNATES FOR APPROVAL.

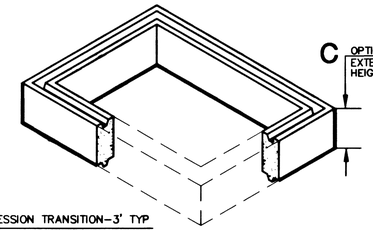

EXTENSION		
MODEL NO.	C	WEIGHT
2436-R6	6"	450 LBS.
2436-R12	12"	900 LBS.

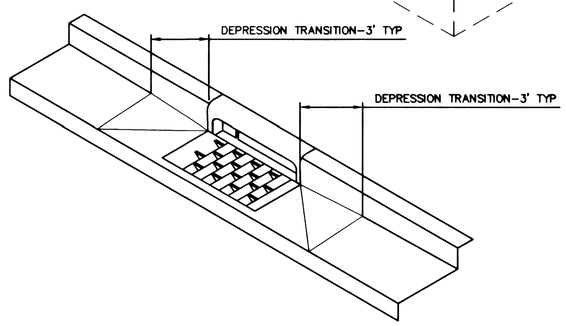

24" x 36" CURB INLET (1)

SCALE: NONE

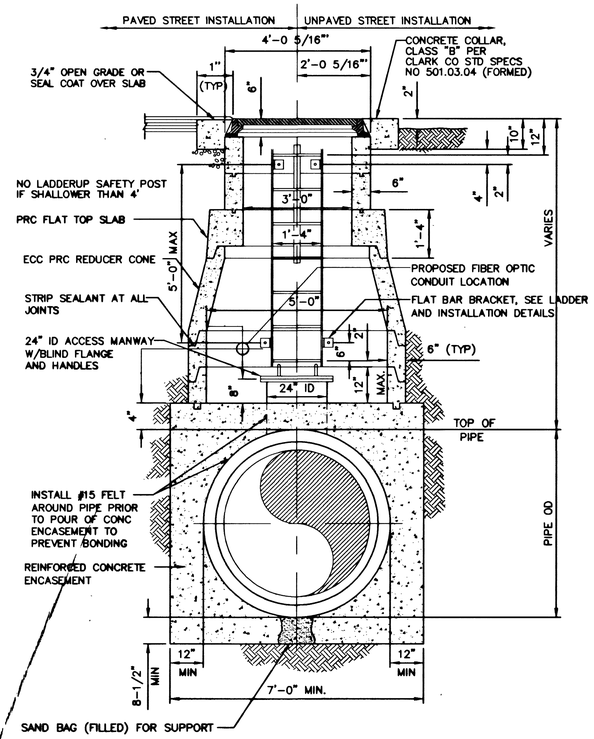

WATER MAN HOLE SECTION (4)

SCALE: NONE

LAS VEGAS VALLEY WATER DISTRICT — DATE

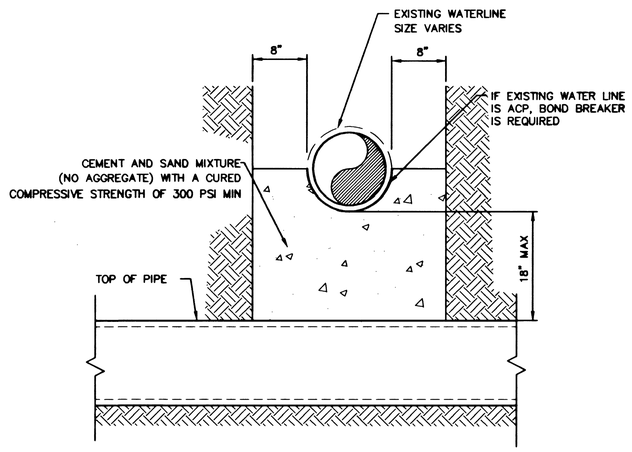

CEMENT SLURRY SECTION (2)

SCALE: NONE

Avoid cutting underground utility lines. It's costly.

Call before you Dig

1-800-227-2600

NO.	DESCRIPTION	DATE	APP'D

DATE : 02/10/00
TIME :
DRAWN BY : JR,W.T.A
DESIGNED BY : JLBT
CHECKED BY : JLBT
JOB NO. : 0133.0141
SCALE : AS SHOWN

PENTACORE
CIVIL ENGINEERING • LAND SURVEYING • PLANNING
CONSTRUCTION MANAGEMENT • ADA CONSULTING
6763 WEST CHARLESTON BOULEVARD
LAS VEGAS, NEVADA 89102 (702)258-0115

CITY OF LAS VEGAS
WASHINGTON AVENUE
MISCELLANEOUS STORM DRAIN DETAILS - 3

PROFESSIONAL ENGINEER - STATE OF NEVADA
MYRON R. WEBER
No. 2646
2/21/00

SHEET 59
U-28
OF 59

DWG. NO. 107-V3119

26531

Q:\0133\0140\New dwgs\Utility\U-28.dwg Tue Jul 25 06:38:10 2000 RAT
Q:\0133\0140\NEWDWGS\ROADWAY\DETAILS.DWG