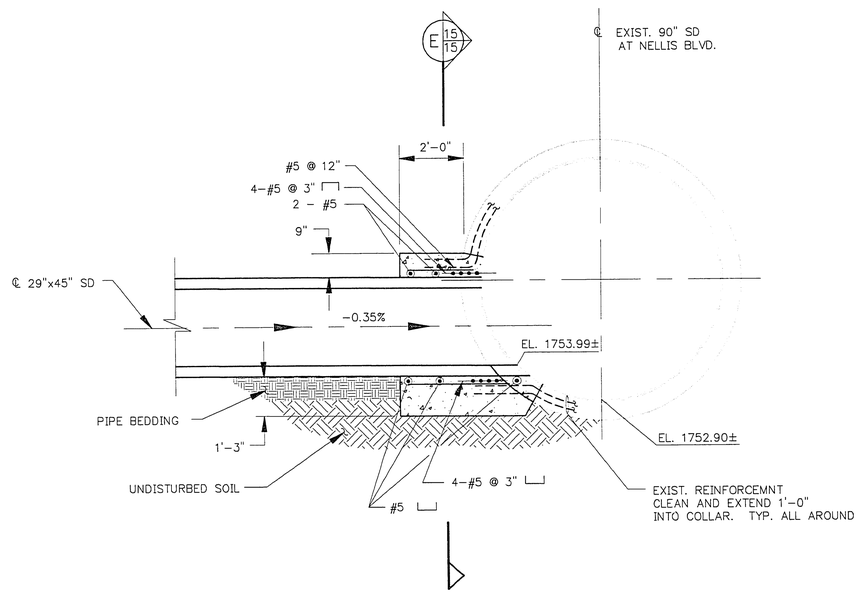

CONNECTION TO EXIST. 90" STORM DRAIN

SCALE: 1/2" = 1'-0"

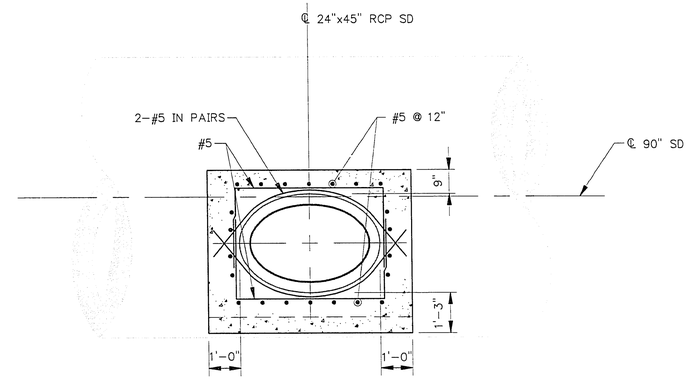

SECTION

E 15/15

SCALE: 1/2" = 1'-0"

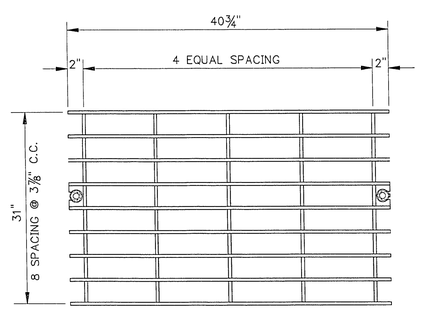

PLAN

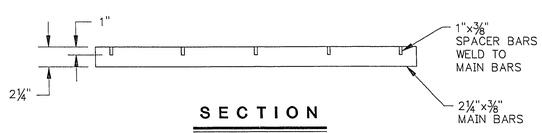

SECTION

GRATING DETAIL

SCALE: 1½" = 1'-0"

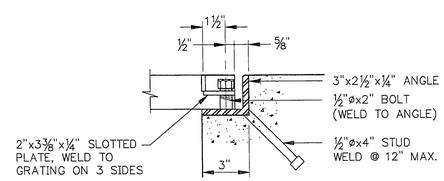

ANCHOR DETAIL

SCALE: 3" = 1'-0"

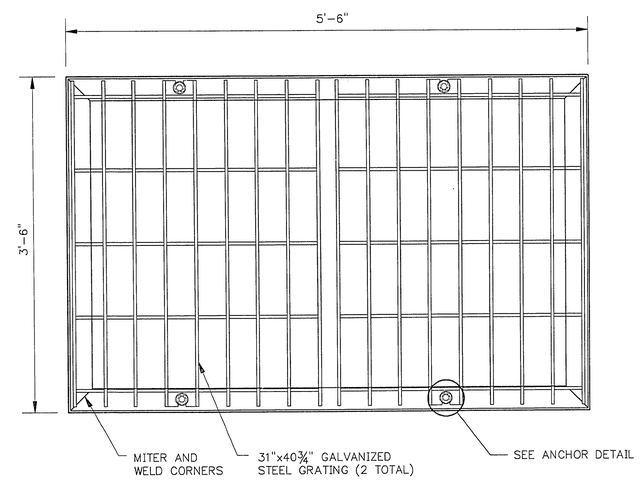

FRAME AND GRATING DETAIL

SCALE: 1½" = 1'-0"

NOTE: GALVANIZE FRAME AND GRATING AFTER FABRICATION.

REVISIONS	DATE

SCALE: HORIZ. AS NOTED VERT. N/A

DESIGNED BY: PRS
APPROVED BY: PRS
DATE: NOV. 9, 1992

DRAWN BY: GPR
REVIEWED BY: JKS
PROJECT NO. 43007

URS CONSULTANTS, INC.
Las Vegas, Nevada

DEPARTMENT OF PUBLIC WORKS

PROJECT: WASHINGTON AVENUE ROADWAY PROJECT

SHEET: STORM DRAIN DETAILS

DRAWING NO. 107-~~Y000~~ D/15

URS/WARP-D15/11-12-92/gpr

29 3-42