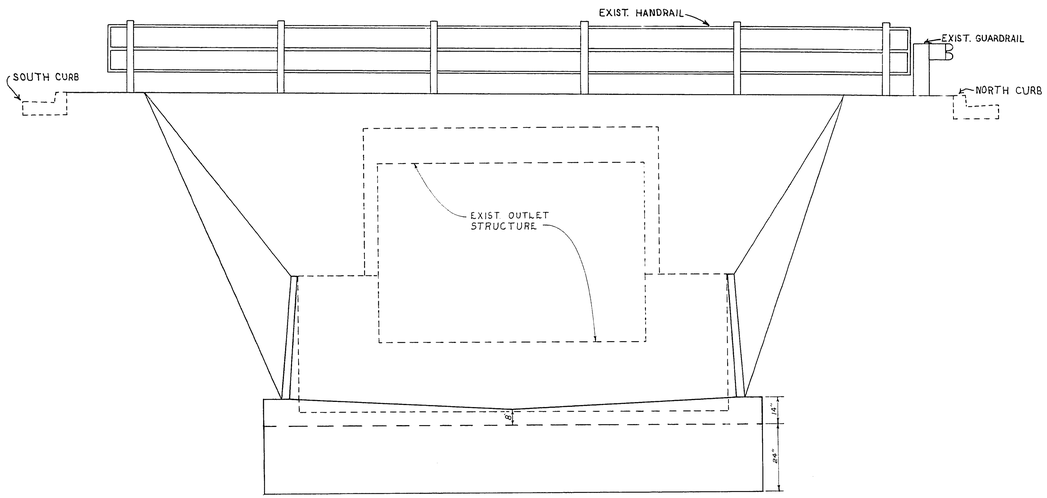

VIEW LOOKING INTO OUTLET STRUCTURE

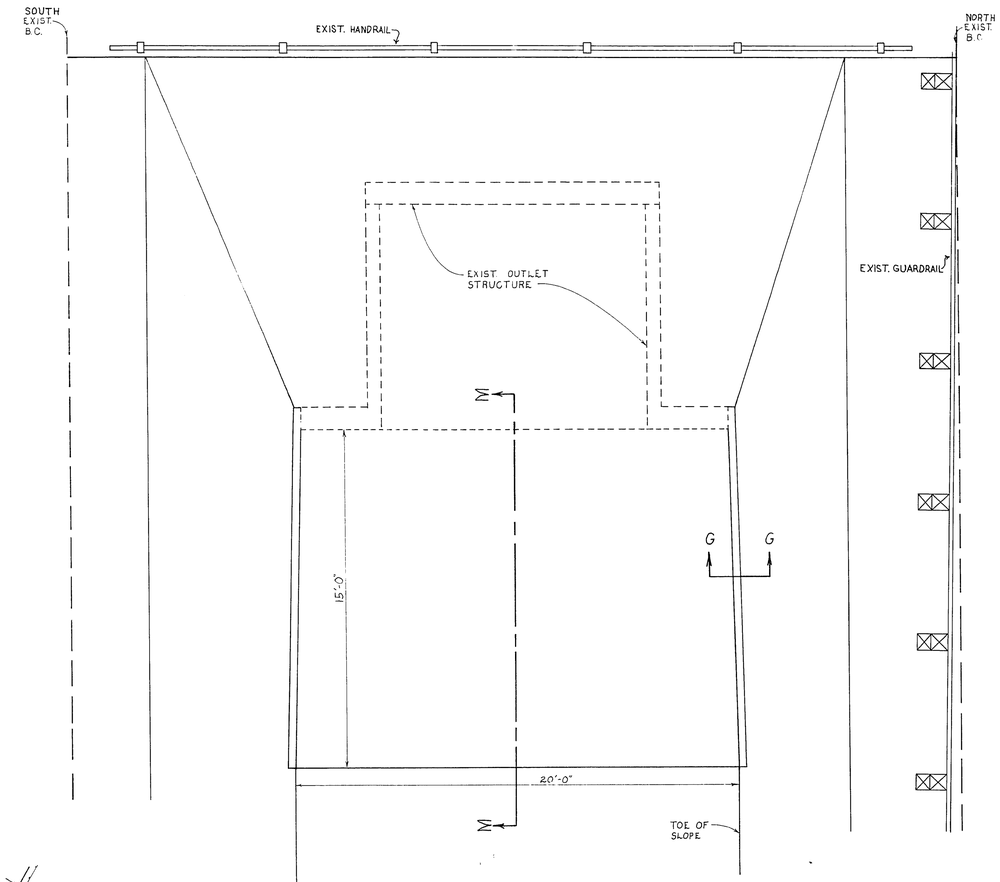

OUTLET STRUCTURE PLAN

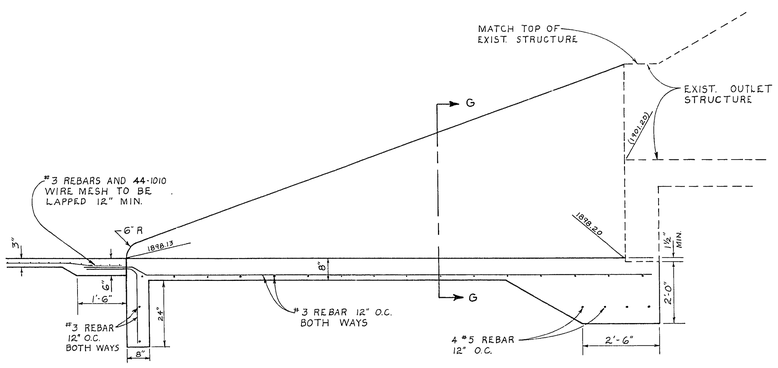

SECTION M-M

SCALE: 1"=2'-0"

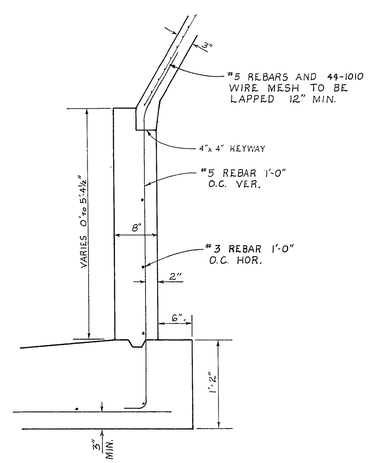

SECTION G-G

SCALE: 1"=1'-0"

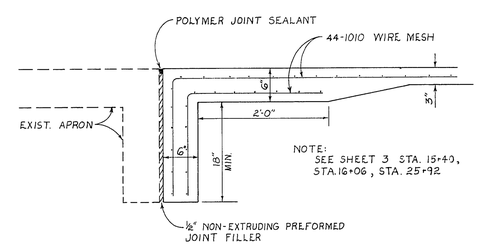

NOTE:
SEE SHEET 3 STA. 15+40, STA. 16+06, STA. 25+92

DETAIL X

SCALE: 1"=1'-0"

Revisions	Date

W.O. no. 3370

Scale (v) 1"=5'

Scale (h) 1"=3'

Fld. bk. no.

Drawn by M. GARLAND & E.E. HUNT

Date

Design by S. JACKSON

Approved by the Director of Public Services

Date 2/19/75

Department of Public Services

Engineering Design Division

OUTLET STRUCTURE DETAILS

WASHINGTON AVENUE

CHANNEL DRAINAGE IMPROVEMENT

Drawing no. 327-V160

4/8