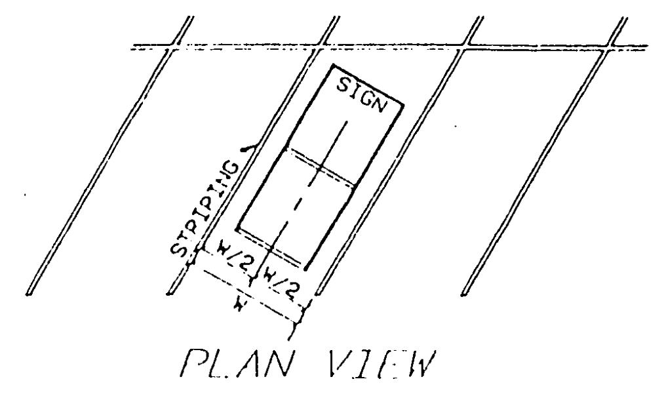
SIGN
STRIPING
W/2
W/2
W
PLAN VIEW

NOTES:

1. ALL PIPE MATERIAL SHALL BE ASA SCHEDULE 40 STANDARD STEEL TUBING.
2. ALL STEEL PLATE MATERIAL SHALL BE ASTM A-36.
3. ALL WELDED CONNECTIONS SHALL BE FULL PENETRATION WELDS.
4. WAL-MART WILL PROVIDE AND MOUNT THE SIGN.

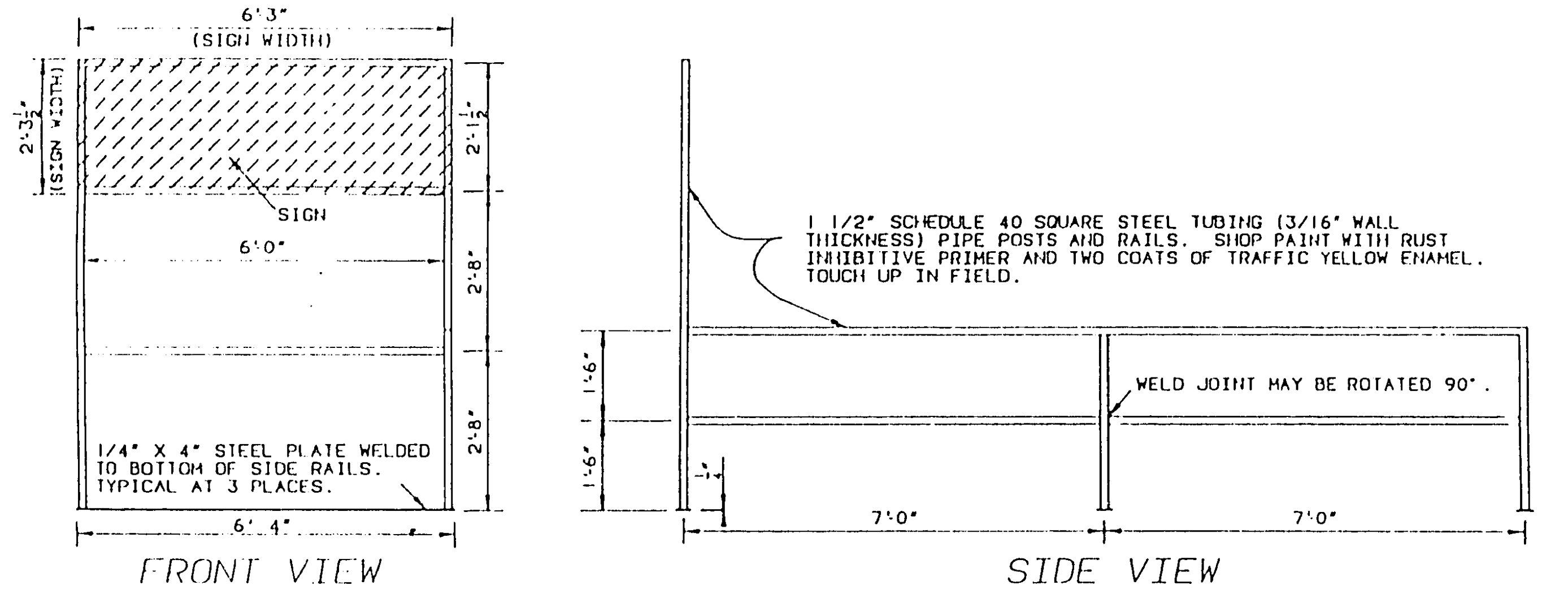
6'3"
(SIGN WIDTH)
2'3½"
(SIGN WIDTH)
2'1½"
SIGN
6'0"
2'8"
2'8"
1/4" X 4" STEEL PLATE WELDED TO BOTTOM OF SIDE RAILS. TYPICAL AT 3 PLACES.
6'4"
FRONT VIEW
1 1/2" SCHEDULE 40 SQUARE STEEL TUBING (3/16" WALL THICKNESS) PIPE POSTS AND RAILS. SHOP PAINT WITH RUST INHIBITIVE PRIMER AND TWO COATS OF TRAFFIC YELLOW ENAMEL. TOUCH UP IN FIELD.
WELD JOINT MAY BE ROTATED 90°.
1'6"
1'6"
7'0"
7'0"
SIDE VIEW

CART CORRAL

N.T.S.

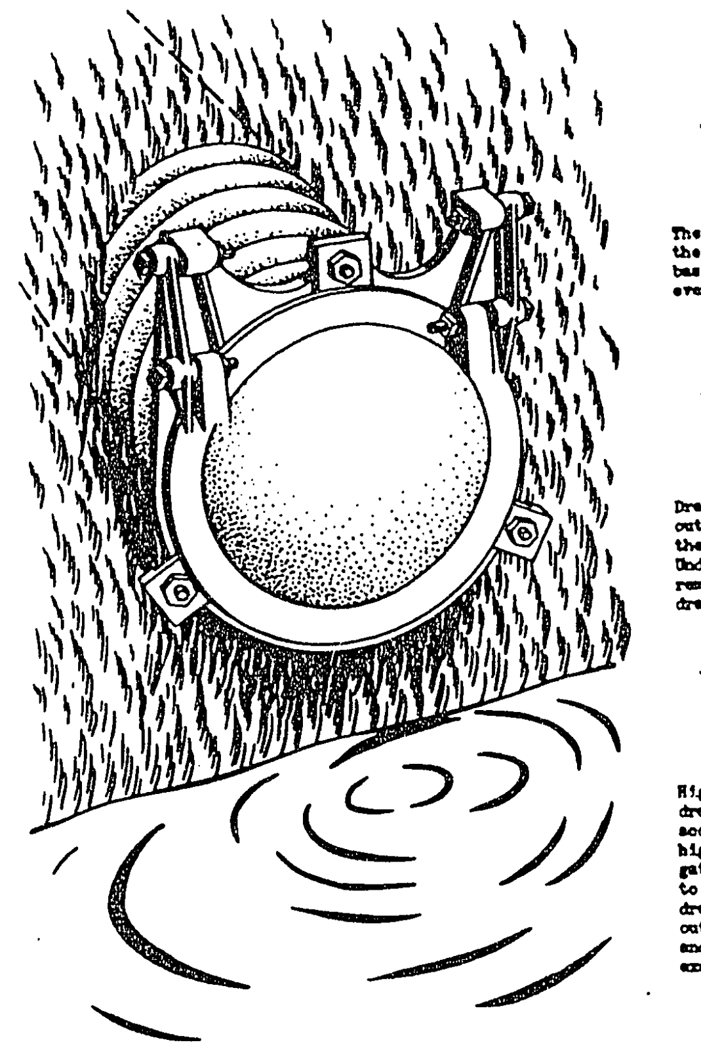

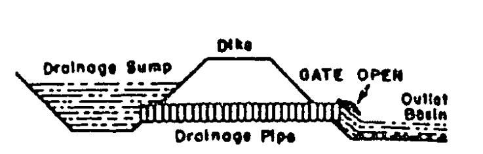
Drainage Sump
Dike
GATE OPEN
Outlet Basin
Drainage Pipe

The water in drainage sump is free to flow through the drainage pipe and be discharged into outlet basin. The gate automatically stands open to whatever degree the drainage flow requires.

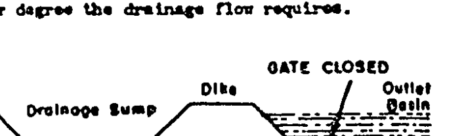
GATE CLOSED
Dike
Drainage Sump
Outlet Basin
Drainage Pipe

Drainage sump is empty and tide or flood head in outlet basin is above the drainage outlet so that the gate is either partially or wholly submerged. Under these conditions the gate automatically remains closed preventing any back flow into the drainage system.

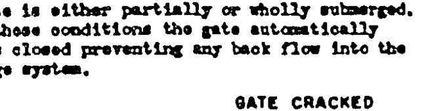
GATE CRACKED
Drainage Sump
Dike
Outlet Basin
Drainage Pipe

High flood in outlet basin and an accumulation of drainage water in the drainage sump. Should the accumulation in drainage sump reach an elevation higher than the flood or tide in outlet basin the gate automatically becomes "cracked" sufficiently to permit the drainage flow to proceed until the drainage head equals the tide or flood head in outlet basin. The gate then automatically closes and remains closed until the drainage head again exceeds the tide or flood head in outlet basin.

Figure 6-44 Automatic swinging floodgate

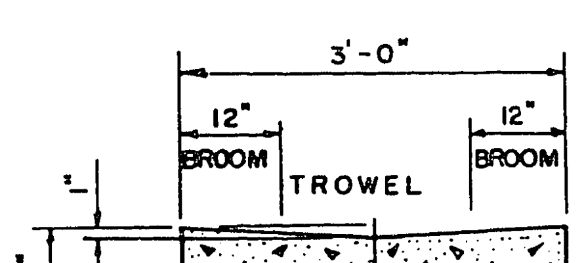
3'-0"
12"
12"
BROOM
TROWEL
BROOM
1"
8"

CONCRETE VALLEY GUTTER

N.T.S.

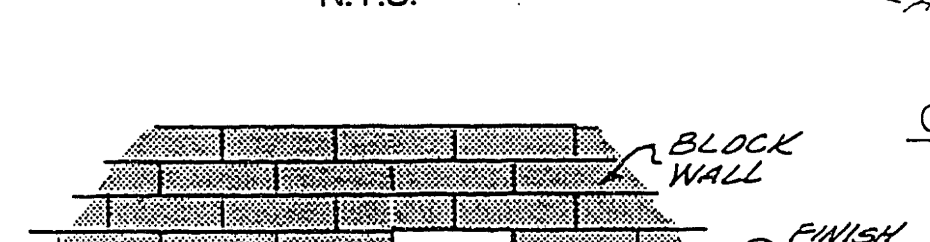
BLOCK WALL
FINISH GRADE
WALL OPENING

WALL OPENING DETAIL

N.T.S.

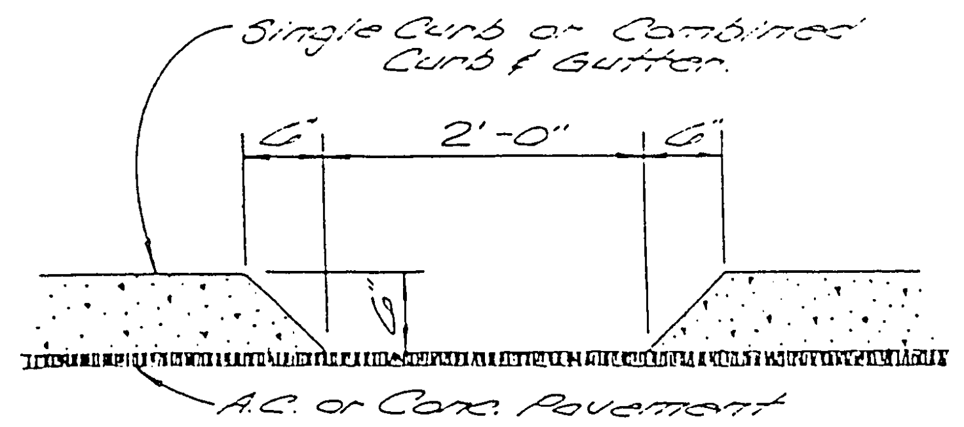
Single Curb or Combined Curb & Gutter.
6"
2'-0"
6"
6"
A.C. or Conc. Pavement

CURB OPENING DETAIL

N.T.S.

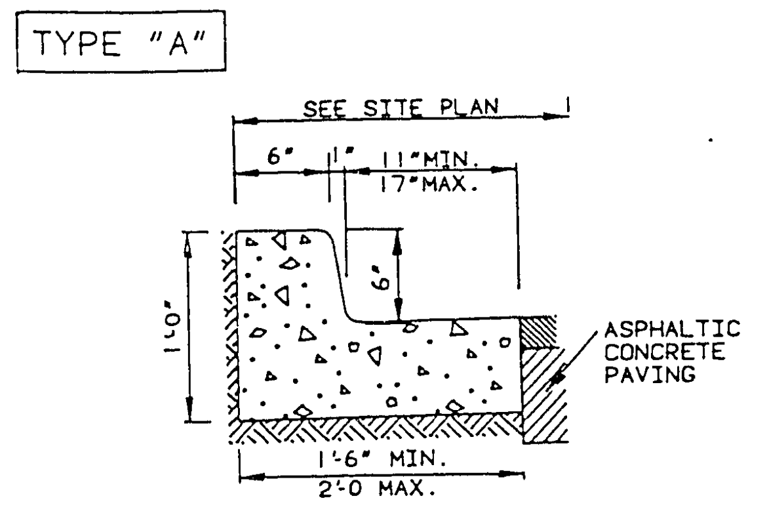
TYPE "A"
SEE SITE PLAN
6"
1"
11"MIN.
17"MAX.
6"
1'-0"
ASPHALTIC CONCRETE PAVING
1'-6" MIN.
2'-0 MAX.

CONCRETE CURB AND GUTTER (NTS)

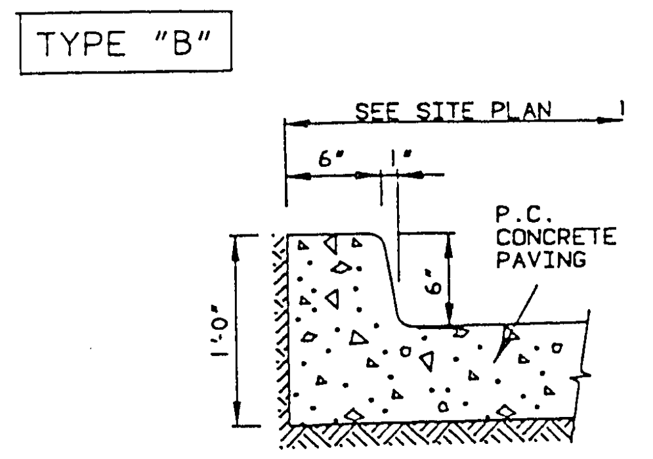
TYPE "B"
SEE SITE PLAN
6"
1"
P.C. CONCRETE PAVING
6"
1'-0"

INTEGRAL CONCRETE CURB (NTS)

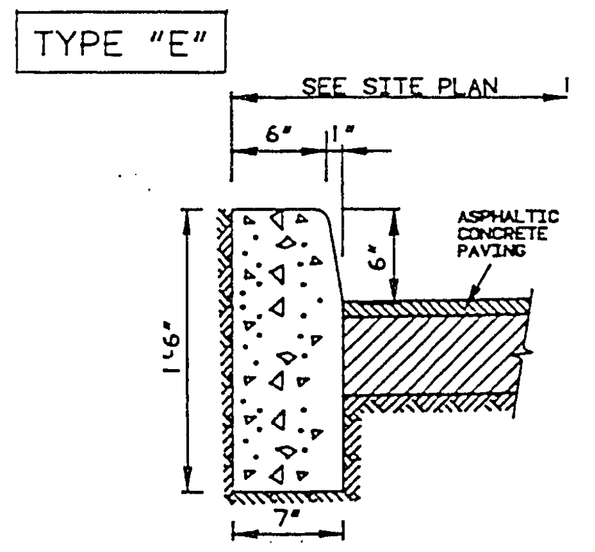
TYPE "E"
SEE SITE PLAN
6"
1"
ASPHALTIC CONCRETE PAVING
6"
1'-6"
7"

TEMPORARY CURB FOR A.C. PAVING (NTS)

WGDH

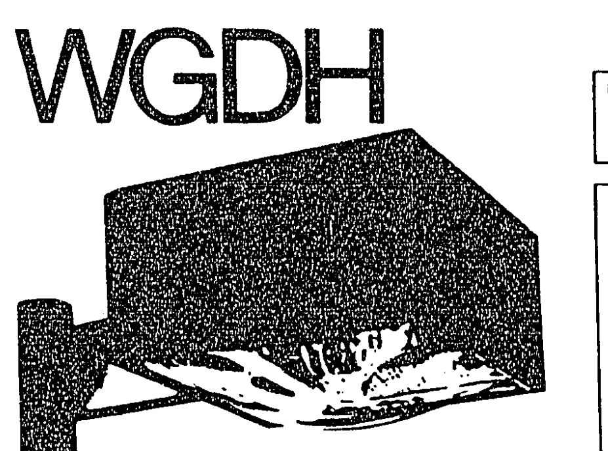

Project.

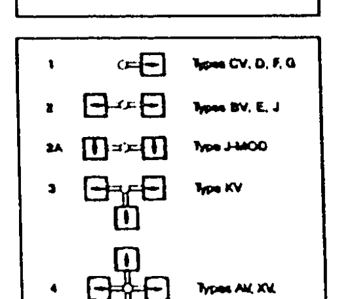
1
Types CV, D, F, G
2
Types BV, E, J
2A
Type J-MOD
3
Type KV
4
Types AV, XV, AV-MOD

Ordering Information

TYPE	QTY.	CATALOG NUMBER	DESCRIPTION/LAMP.
AV		WGDH-104VS-480-400MH-BLP	4-WAY (MS 400 BU)
AV-MOD		WGDH-103VS-1FMU-480-400-MH-BLP	4-WAY (3 MS 400 BU) (1 MS 400 HOR)
KV		WGDH-103VS-480-400MH-BLP	3-WAY (MS 400 BU)
BV		WGDH-102VS-480-400MH-BLP	2-WAY (MS 400 BU)
CV		WGDH-101VS-480-400MH-BLP	1-WAY (MS 400 BU)
D		WGDH-101FM-480-400MH-BLP	1-WAY (MS 400 HOR)
E		WGDH-1921-480-400MH-BLP	2-WAY (MS 400 HOR)
F		WGDH-1911-480-400MH-BLP	1-WAY (MS 400 HOR)
G		WGDH-1913-480-400MH-BLP	1-WAY (MS 400 HOR)
J		WGDH-1923-480-400MH-BLP	2-WAY (MS 400 HOR)
J-MOD		WGDH-1923-480-400MH-BLP	2-WAY (MS 400 HOR)
XV		WGDH-204VS-480-1000MH-BLP	4-WAY (MS 1000 BU)
		WGD-1RS-39-11-D4-PP	39' POLE STEEL
		GALLON BLACK	PAINT
		MS-400 HOR	HORIZ LAMP
		MS 400 BU	VERTICAL LAMP.
		WGD-PTF	STEEL POLE TOP FITTER

All Catalog Numbers shown are 480 Volt. Other voltages are available, please specify (120, 240, 208, 277)
Gardco Optical Systems are protected by U.S. Patent #3746854

Optical Assemblies and Light Distribution Patterns

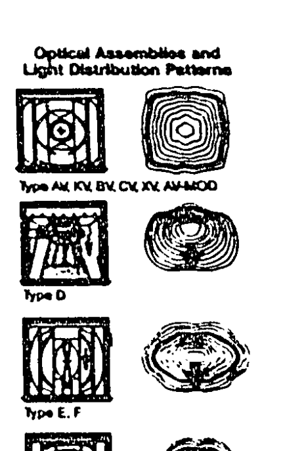
Type AV, KV, BV, CV, XV, AV-MOD
Type D
Type E, F
Type G, J, J MOD

NOTE: J-MOD Requires field rotation of optical reflector as shown on drawings—see instructions for optical rotation.

Gardco Lighting
2661 Alvarado Street
San Leandro CA 94577
800 227-0758 (In California 415 357-6900)

LIGHTING SCHEDULE

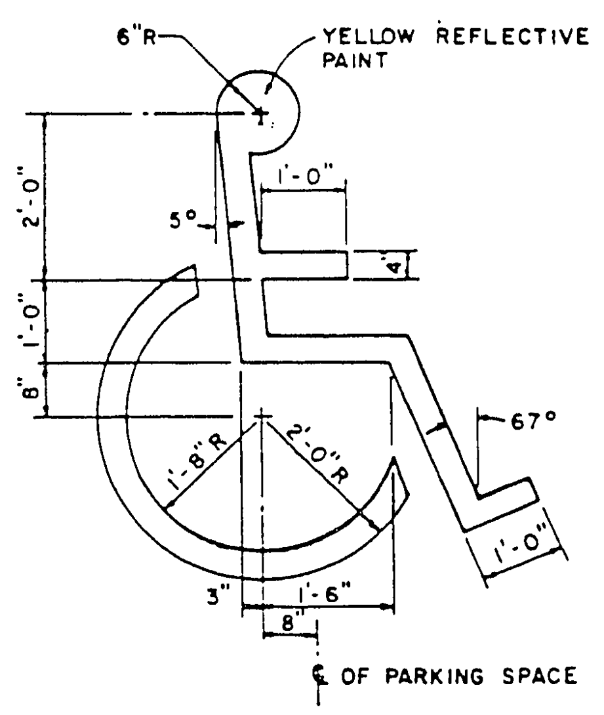
YELLOW REFLECTIVE PAINT
6"R
2'-0"
5°
1'-0"
4"
1'-0"
8"
1'-8"R
2'-0"R
67°
1'-0"
3"
1'-6"
8"
℄ OF PARKING SPACE

INTERNATIONAL HANDICAP SYMBOL

N.T.S.

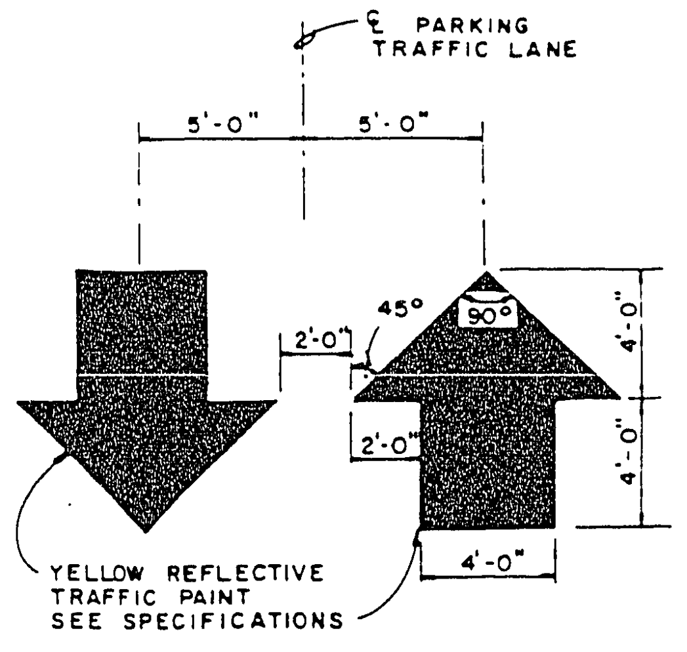
℄ PARKING TRAFFIC LANE
5'-0"
5'-0"
45°
90°
2'-0"
2'-0"
4'-0"
4'-0"
4'-0"
YELLOW REFLECTIVE TRAFFIC PAINT SEE SPECIFICATIONS

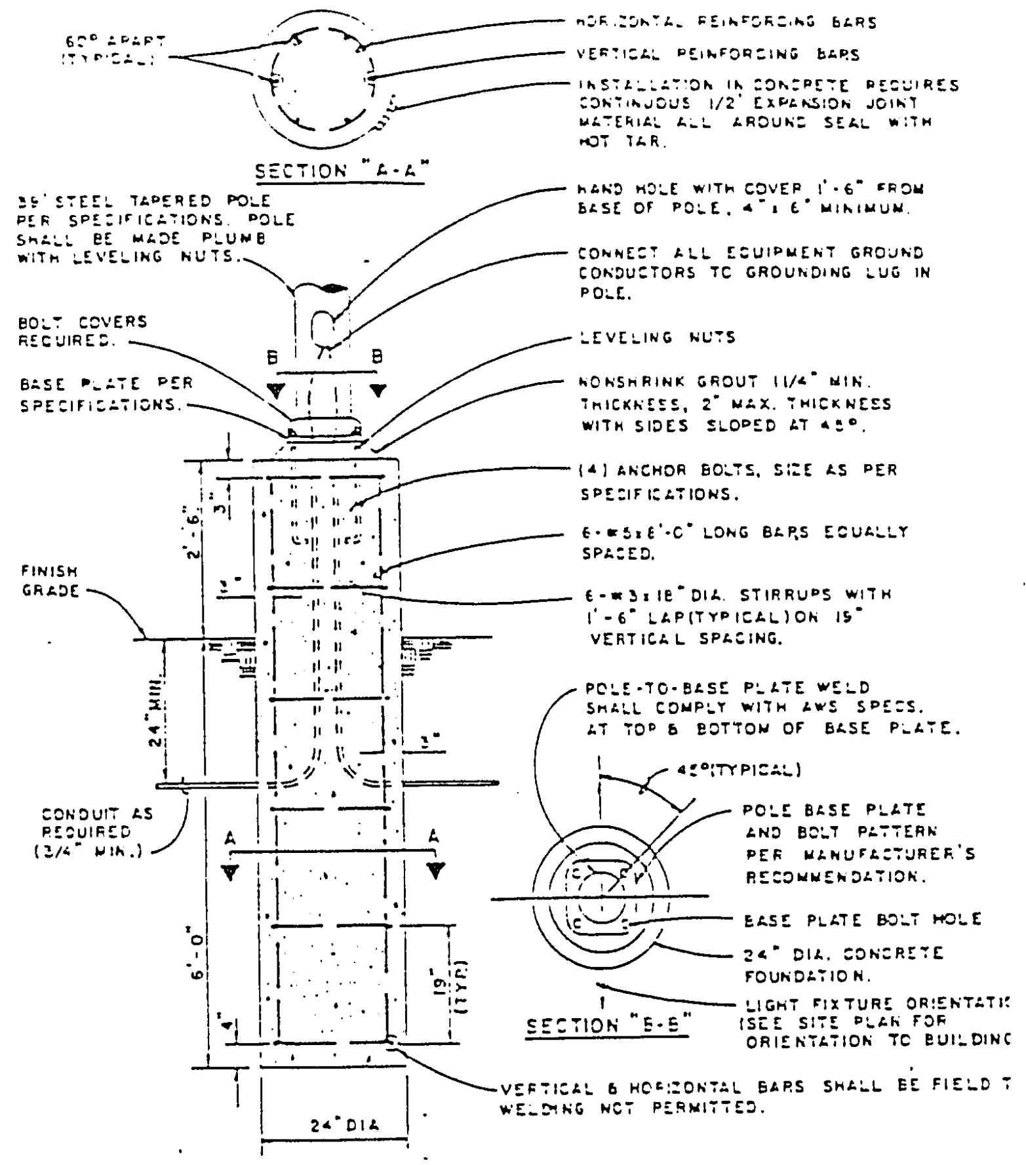
60° APART (TYPICAL)
HORIZONTAL REINFORCING BARS
VERTICAL REINFORCING BARS
INSTALLATION IN CONCRETE REQUIRES CONTINUOUS 1/2" EXPANSION JOINT MATERIAL ALL AROUND SEAL WITH HOT TAR.
SECTION "A-A"
39' STEEL TAPERED POLE PER SPECIFICATIONS. POLE SHALL BE MADE PLUMB WITH LEVELING NUTS.
HAND HOLE WITH COVER 1'-6" FROM BASE OF POLE, 4" x 6" MINIMUM.
CONNECT ALL EQUIPMENT GROUND CONDUCTORS TO GROUNDING LUG IN POLE.
BOLT COVERS REQUIRED.
LEVELING NUTS
BASE PLATE PER SPECIFICATIONS.
B
B
NONSHRINK GROUT 1 1/4" MIN. THICKNESS, 2" MAX. THICKNESS WITH SIDES SLOPED AT 45°.
(4) ANCHOR BOLTS, SIZE AS PER SPECIFICATIONS.
6-#5x8'-0" LONG BARS EQUALLY SPACED.
6-#3x18" DIA. STIRRUPS WITH 1'-6" LAP(TYPICAL) ON 15" VERTICAL SPACING.
FINISH GRADE
2'-6"
3"
3"
24" MIN.
3"
POLE-TO-BASE PLATE WELD SHALL COMPLY WITH AWS SPECS. AT TOP & BOTTOM OF BASE PLATE.
45°(TYPICAL)
CONDUIT AS REQUIRED (3/4" MIN.)
A
A
POLE BASE PLATE AND BOLT PATTERN PER MANUFACTURER'S RECOMMENDATION.
BASE PLATE BOLT HOLE
24" DIA. CONCRETE FOUNDATION.
6'-0"
19" (TYP.)
4"
SECTION "B-B"
LIGHT FIXTURE ORIENTATION (SEE SITE PLAN FOR ORIENTATION TO BUILDING
VERTICAL & HORIZONTAL BARS SHALL BE FIELD T
WELDING NOT PERMITTED.
24" DIA

NOTES:

1. 2500 PSI MIN. 28 DAY COMPRESSIVE STRENGTH CONC. WITH GRADE 60 REINF. STEEL.
2. IF WATER IS PRESENT IN HOLE, REMOVE BEFORE POURING CONCRETE.
3. EXPOSED CONCRETE AND GROUT SHALL BE PAINTED TRAFFIC YELLOW BY THE PAVEMENT STRIPING CONTRACTOR.
4. FOUNDATION EXCAVATION SHALL BE BY 24" AUGER IN UNDISTURBED OR PROPERLY COMPACTED FILL PER SPECIFICATIONS.
5. DETAIL FOR 40' POLE W/MAX. FIXTURE EPA 4.6 SQ. FT.

TYPICAL PARKING LOT LIGHTING POLE FOUNDATION

N.T.S.

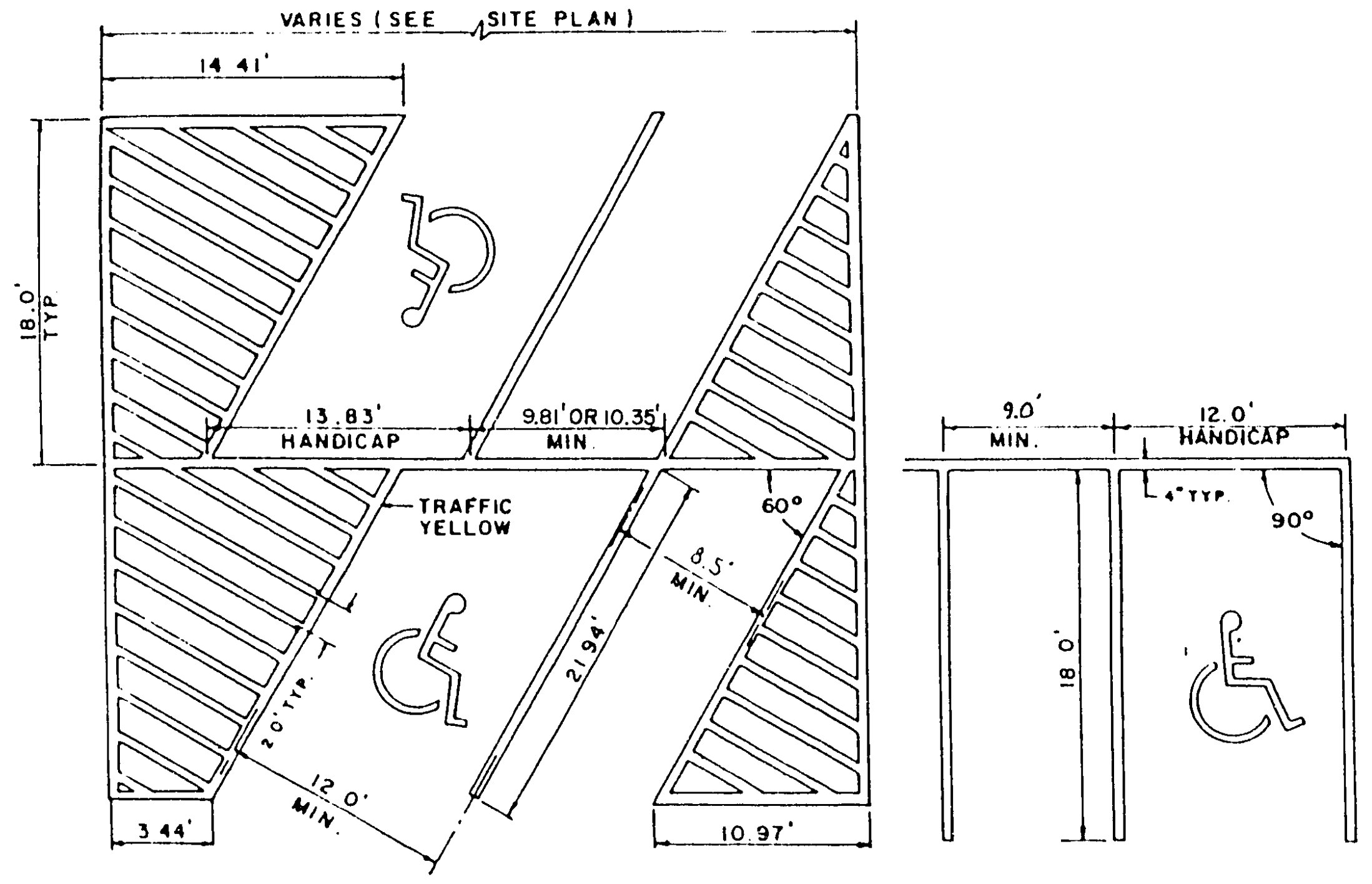
VARIES (SEE SITE PLAN)
14.41'
18.0' TYP
13.83' HANDICAP
9.81' OR 10.35' MIN
TRAFFIC YELLOW
60°
8.5' MIN.
21.94'
2.0' TYP.
12.0' MIN.
3.44'
10.97'
9.0' MIN.
12.0' HANDICAP
4" TYP.
90°
18.0'

60° STALL

90° STALL

TYPICAL PARKING STRIPING DETAILS

N.T.S.

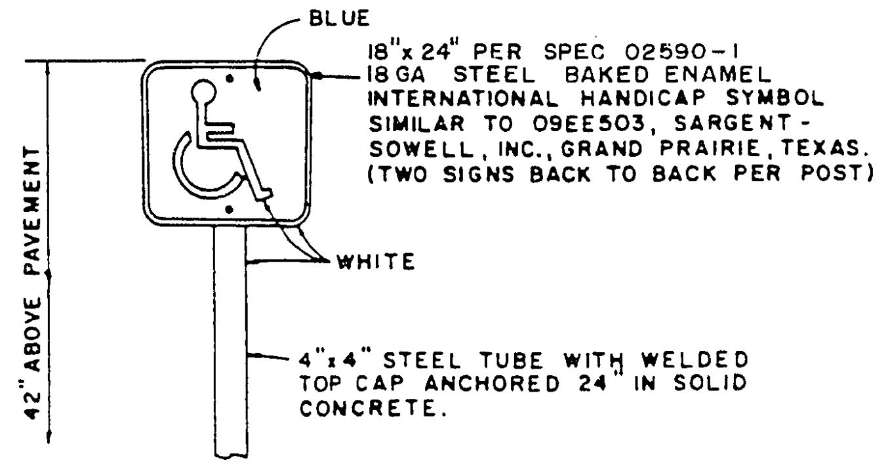
BLUE
18"x 24" PER SPEC 02590-1 18 GA STEEL BAKED ENAMEL INTERNATIONAL HANDICAP SYMBOL SIMILAR TO 09EE503, SARGENT-SOWELL, INC., GRAND PRAIRIE, TEXAS. (TWO SIGNS BACK TO BACK PER POST)
WHITE
42" ABOVE PAVEMENT
4"x4" STEEL TUBE WITH WELDED TOP CAP ANCHORED 24" IN SOLID CONCRETE.

HANDICAP SIGN

N.T.S.

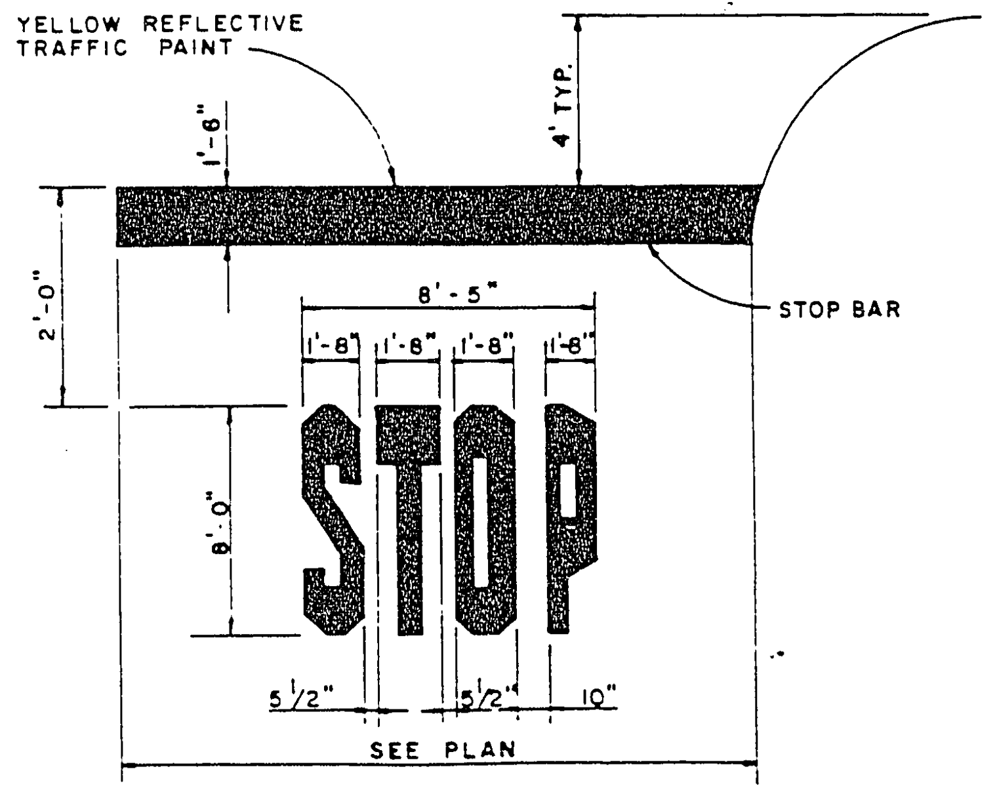
YELLOW REFLECTIVE TRAFFIC PAINT
1'-6"
4' TYP.
2'-0"
8'-5"
1'-8"
1'-8"
1'-8"
1'-8"
STOP BAR
STOP
8'-0"
5 1/2"
5 1/2"
10"
SEE PLAN

TYPICAL PAVEMENT MARKINGS

NO SCALE

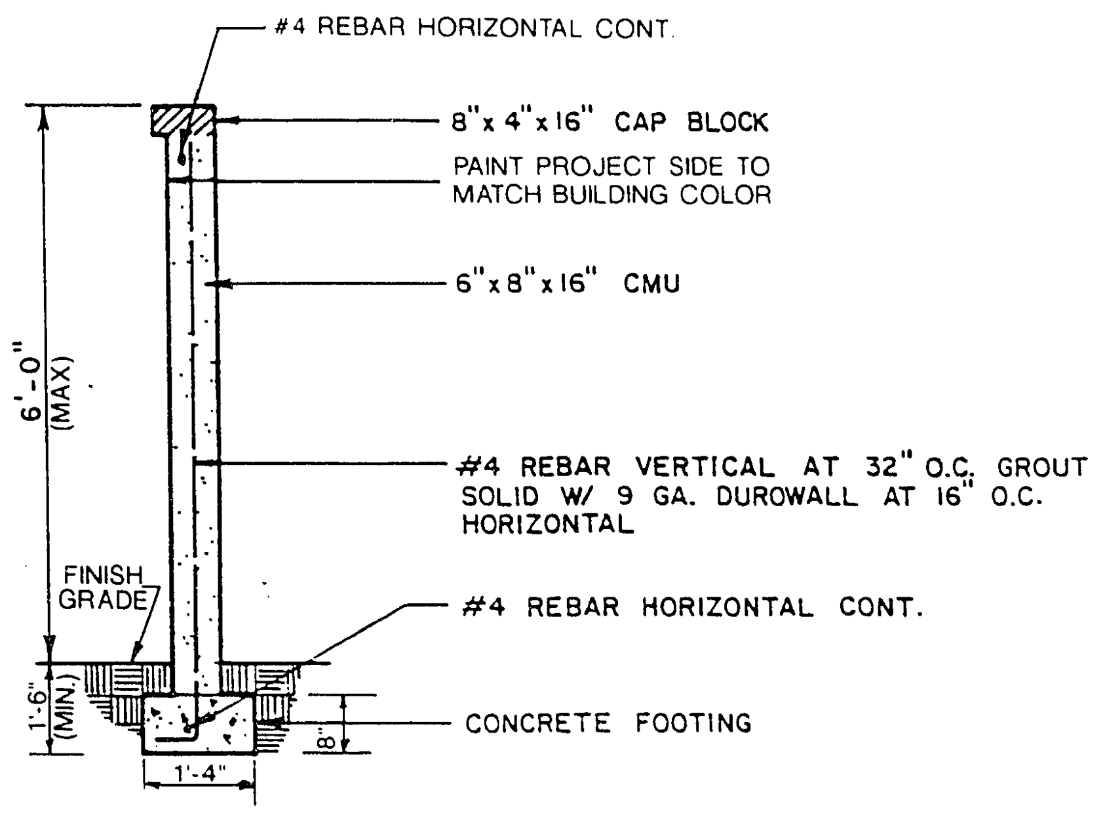
#4 REBAR HORIZONTAL CONT.
8"x 4"x 16" CAP BLOCK
PAINT PROJECT SIDE TO MATCH BUILDING COLOR
6"x 8"x 16" CMU
6'-0" (MAX)
#4 REBAR VERTICAL AT 32" O.C. GROUT SOLID W/ 9 GA. DUROWALL AT 16" O.C. HORIZONTAL
FINISH GRADE
#4 REBAR HORIZONTAL CONT.
1'-6" (MIN.)
8"
CONCRETE FOOTING
1'-4"

WALL SECTION

1/2"=1'-0"

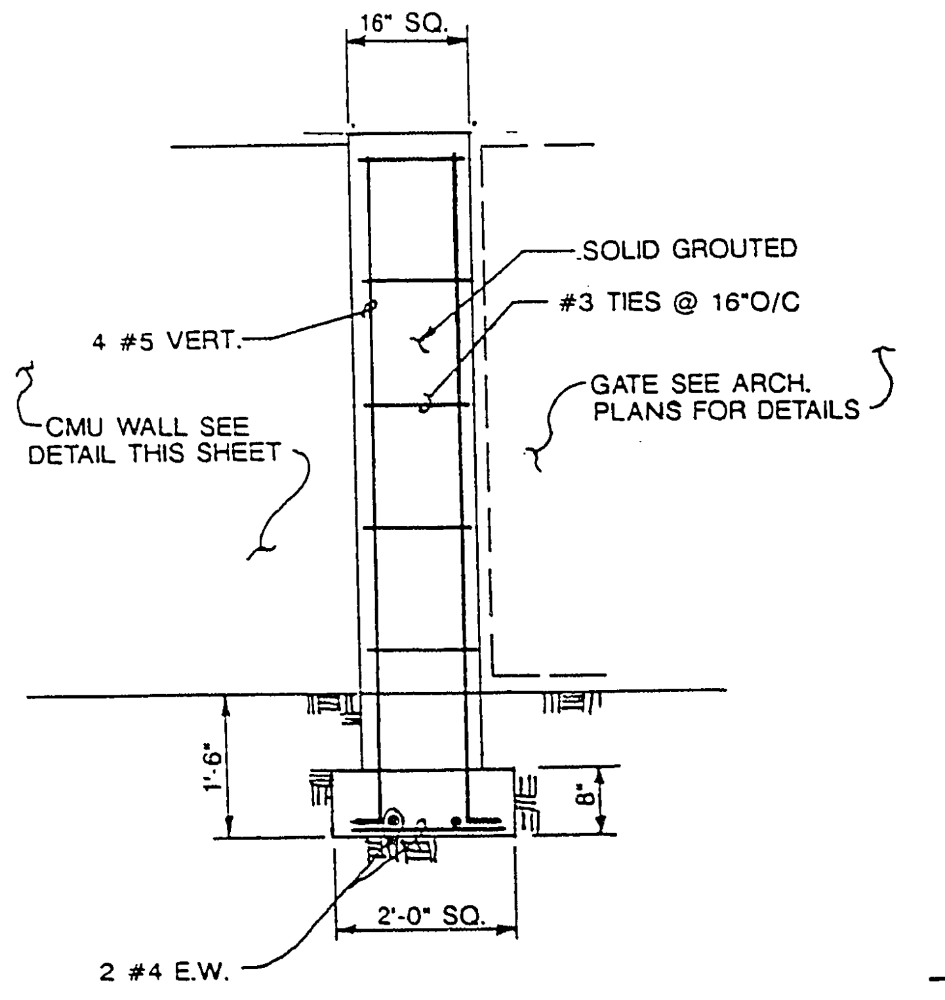
16" SQ.
SOLID GROUTED
#3 TIES @ 16"O/C
4 #5 VERT.
GATE SEE ARCH. PLANS FOR DETAILS
CMU WALL SEE DETAIL THIS SHEET
1'-6"
8"
2'-0" SQ.
2 #4 E.W.

PILASTER DETAIL @ GATE

1/2"=1'-0"

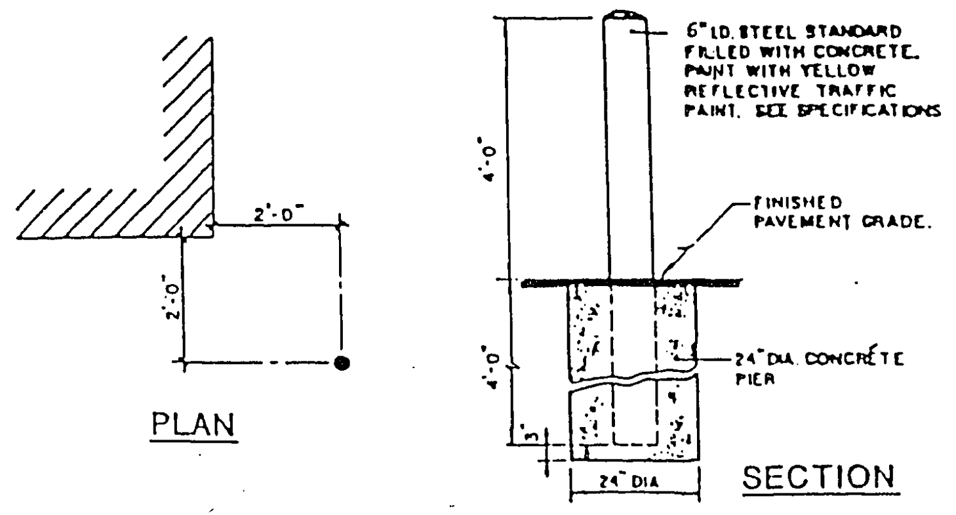
2'-0"
2'-0"
PLAN
6" I.D. STEEL STANDARD FILLED WITH CONCRETE. PAINT WITH YELLOW REFLECTIVE TRAFFIC PAINT. SEE SPECIFICATIONS
4'-0"
FINISHED PAVEMENT GRADE.
4'-0"
24" DIA. CONCRETE PIER
24" DIA
SECTION

GUARDPOST DETAIL

NTS

GATE SWING POST DIA.	
GATE SIZE	PIPE DIA
6' AND LESS	3" O.D.-5.79 LBS/FT
6'-10'	4" O.D.-9.10 LBS/FT

NOTE:

INSTALL REDWOOD SLATS VERT.
FULL HEIGHT OF GATE FOR SCREENING.

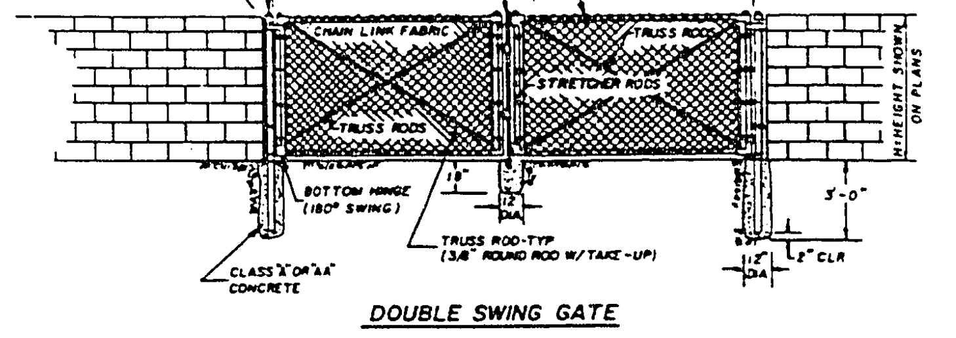
GATE SWING POST
TOP HINGE (180° SWING)
10'-20'
STEEL DROP BAR (1/2" Ø)
FRAME MEMBERS TYPICAL (2" O.D. x 2.72 #/FT)
CHAIN LINK FABRIC
TRUSS RODS
STRETCHER RODS
TRUSS RODS
HEIGHT SHOWN ON PLANS
BOTTOM HINGE (180° SWING)
TRUSS ROD-TYP (3/8" ROUND ROD W/ TAKE-UP)
CLASS "A" OR "AA" CONCRETE
3'-0"
2" CLR
DOUBLE SWING GATE

CHAIN LINK GATES

NTS

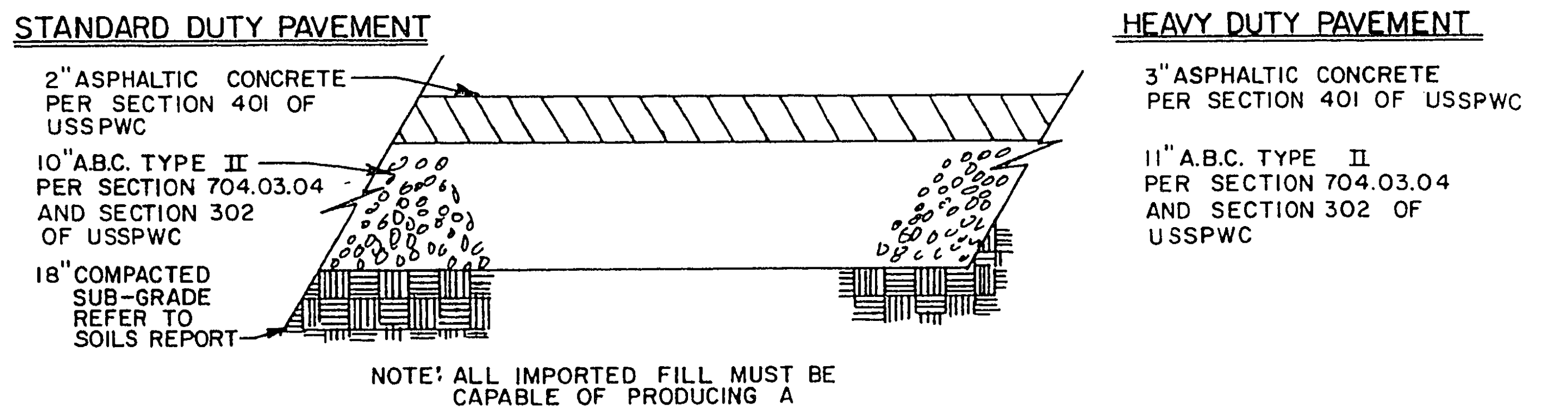
STANDARD DUTY PAVEMENT
2" ASPHALTIC CONCRETE PER SECTION 401 OF USSPWC
10" A.B.C. TYPE II PER SECTION 704.03.04 AND SECTION 302 OF USSPWC
18" COMPACTED SUB-GRADE REFER TO SOILS REPORT
HEAVY DUTY PAVEMENT
3" ASPHALTIC CONCRETE PER SECTION 401 OF USSPWC
11" A.B.C. TYPE II PER SECTION 704.03.04 AND SECTION 302 OF USSPWC

NOTE: ALL IMPORTED FILL MUST BE CAPABLE OF PRODUCING A C.B.R. OF 3 OR GREATER.

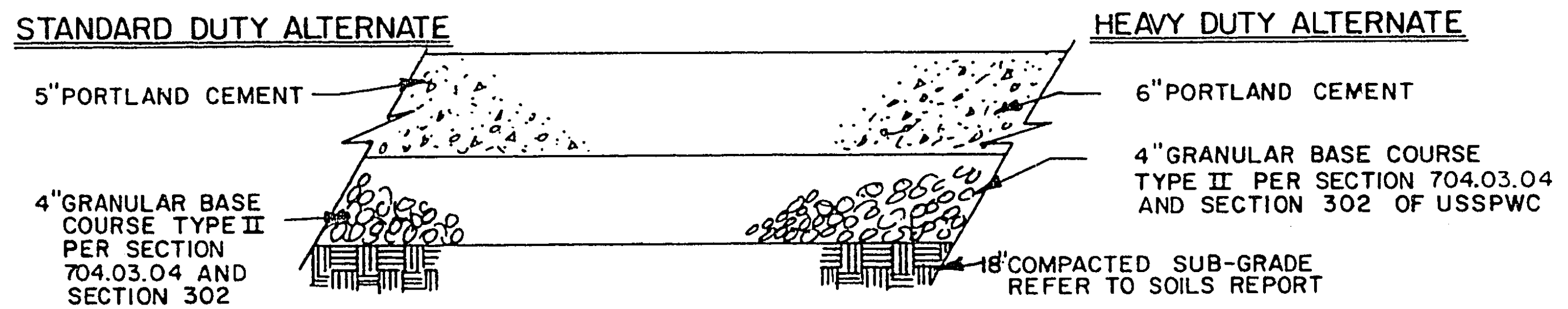
STANDARD DUTY ALTERNATE
5" PORTLAND CEMENT
4" GRANULAR BASE COURSE TYPE II PER SECTION 704.03.04 AND SECTION 302 OF USSPWC
HEAVY DUTY ALTERNATE
6" PORTLAND CEMENT
4" GRANULAR BASE COURSE TYPE II PER SECTION 704.03.04 AND SECTION 302 OF USSPWC
18" COMPACTED SUB-GRADE REFER TO SOILS REPORT

RIGID PAVEMENT

(NOTE USSPWC = UNIFORM STANDARD SPECIFICATIONS FOR PUBLIC WORKS CONSTRUCTION, OFF-SITE IMPROVEMENTS, CLARK COUNTY AREA, NEVADA, 1986 EDITION)

NO.	DATE	REVISION DESCRIPTION
1	1-16-90	REVISED PER WAL-MART
2	1-18-90	RELOCATE W-M BLDG 5' EAST
3		REVISED PER WAL-MART
6	4/11/90	

2/5/90

DATE:

SHEET TITLE
DETAIL SHEET

PROJECT TITLE
WAL-MART NELLIS AND CHARLESTON

DUNAWAY ASSOCIATES WEST INC
ENGINEERS LANDSCAPE ARCHITECTS PLANNERS
PHOENIX, AZ FORT WORTH, TX ONTARIO, CA
4500 S. LAKESHORE DRIVE
SUITE 215
TEMPE, ARIZONA 85282
(602) 345-0383 FAX (602) 491-2581

JOB NO. 8921900
DESIGN BY: PLN
CHECKED BY: FSW
DATE: DEC 1989
SCALE: AS SHOWN
SHEET 7A OF 10 SHEETS

22-3-51 107V1796