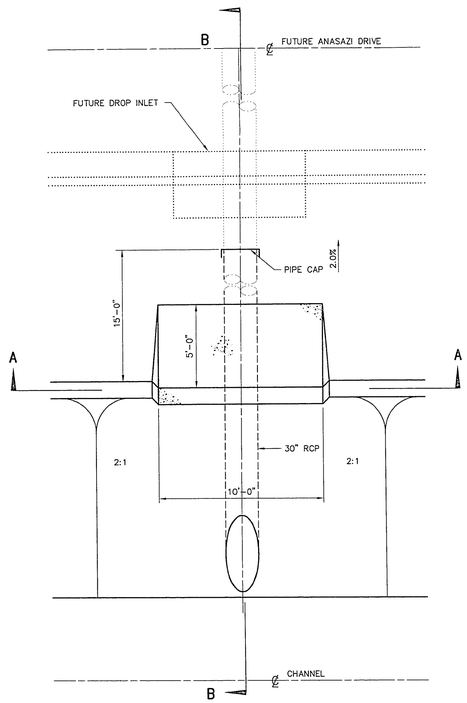

ANASAZI OVERFLOW CHANNEL PLAN (C/14)
1"=4'

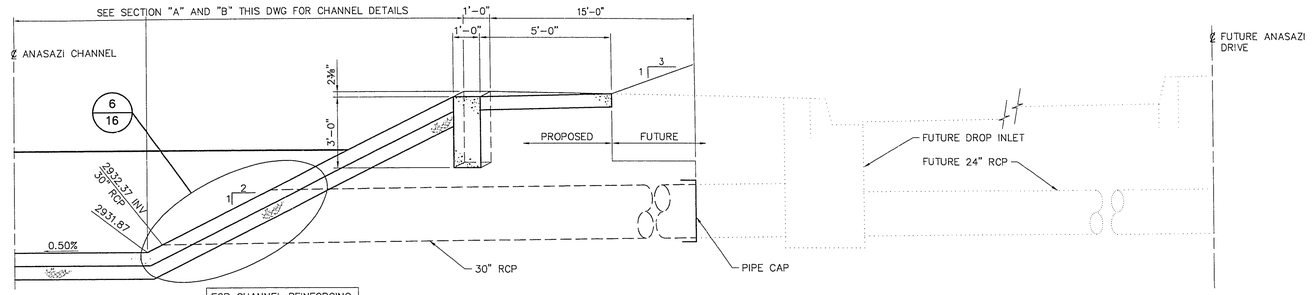

ANASAZI OVERFLOW CHANNEL SECTION B - B (C/14)
1"=30'

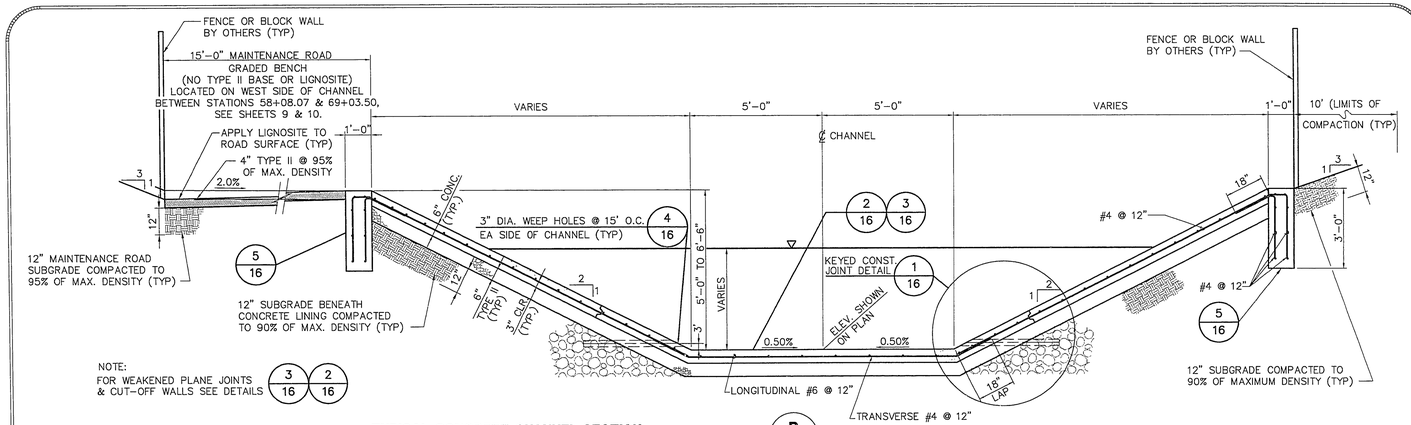

TYPICAL CONCRETE CHANNEL SECTION (B/14)
N.T.S.

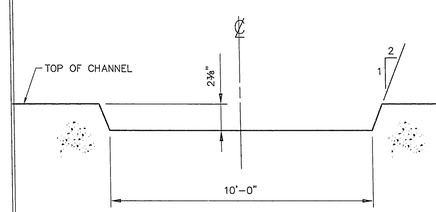

ANASAZI OVERFLOW CHANNEL SECTION A - A (C/14)
1"=4 H; 1"=10' V

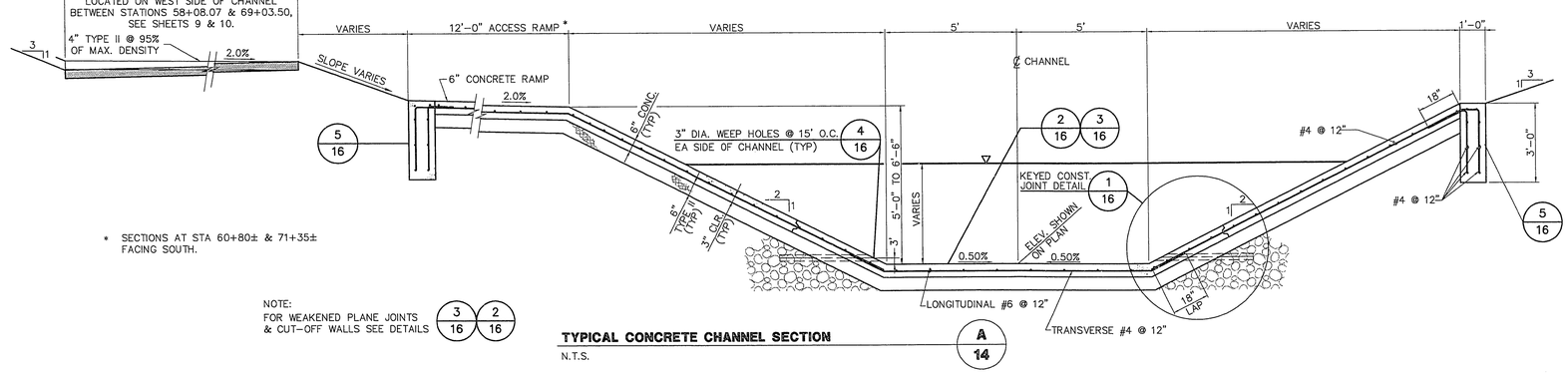

TYPICAL CONCRETE CHANNEL SECTION (A/14)
N.T.S.

REV.	DATE	DESCRIPTION	DATE	APPROVAL

RECOMMENDED: ROY A. DUBOIS, P.E. — R.P.E. NO. 9514 — DATE 10-5-94

ENGINEER'S SEAL: STATE OF NEVADA — ROY A. DUBOIS — REGISTERED PROFESSIONAL ENGINEER — CIVIL — No. 9514

G.C. WALLACE, INC.
Engineering/Architecture
1555 SOUTH RAINBOW BLVD./LAS VEGAS, NEVADA 89102

SUMMERLIN
VILLAGE 8 DIVERSION CHANNEL
CHANNEL SECTIONS

SHEET **14**
SHT 14 OF 16

THESE PLANS APPROVED FOR GRADING ONLY - 10/07/94

JOB NO. 62008.209

SAC-14 10/04/94

AC-116

731-59