GENERAL REQUIREMENTS

DRAWINGS

THESE DRAWINGS HAVE BEEN PREPARED USINGS STANDARDS OF PROFESSIONAL CARE AND COMPLETENESS NORMALLY EXERCISED UNDER SIMILAR CIRCUMSTANCES BY REPUTABLE STRUCTURAL ENGINEERS IN THIS OR SIMILAR LOCALITIES. THEY NECESSARILY ASSUME THAT THE WORK DEPICTED WILL BE PERFORMED BY AN EXPERIENCED CONTRACTOR AND/OR WORKERS WHO HAVE A WORKING KNOWLEDGE OF THE APPLICABLE CODE STANDARDS AND REQUIREMENTS AND OF INDUSTRY ACCEPTED STANDARD GOOD PRACTICE. AS NOT EVERY CONDITION OR ELEMENT IS (OR CAN BE) EXPLICITLY SHOWN ON THESE DRAWINGS, IT IS UNDERSTOOD THAT THE CONTRACTOR WILL USE INDUSTRY ACCEPTED STANDARD GOOD PRACTICE FOR ALL MISCELLANEOUS WORK NOT EXPLICITLY SHOWN.

MISCELLANEOUS ITEMS

CALCULATION AND DESIGN OF MISCELLANEOUS NON-STRUCTURAL ITEMS, SUCH AS STAIRS, RAILINGS, NON-STRUCTURAL WALLS AND PREFABRICATED STRUCTURAL ITEMS, SUCH AS FLOOR AND ROOF TRUSSES, ARE NOT INCLUDED AND ARE TO BE PROVIDED BY OTHERS UNLESS SPECIFICALLY NOTED ON THESE DRAWINGS.

CONSTRUCTION MEANS AND METHODS

THESE DRAWINGS REPRESENT THE FINISHED STRUCTURE. THEY DO NOT INDICATE THE METHOD OF CONSTRUCTION. THE CONTRACTOR SHALL BE SOLELY RESPONSIBLE FOR CONSTRUCTION MEANS, METHODS, TECHNIQUES, SEQUENCES AND PROCEDURES. IT SHALL BE THE CONTRACTOR'S RESPONSIBILITY TO DESIGN AND PROVIDE ADEQUATE SHORING, BRACING, FORM-WORK, ETC... AS REQUIRED FOR THE PROTECTION OF LIFE AND PROPERTY (INCLUDING UTILITIES) DURING CONSTRUCTION. CONSTRUCTION MATERIALS SHALL BE PLACED ON THE STRUCTURE SUCH THAT THE DESIGN LOADS ARE NOT EXCEEDED.

DIMENSIONS, INSERTS AND OPENINGS

THE CONTRACTOR SHALL BE RESPONSIBLE FOR VERIFICATION OF ALL DIMENSIONS, CONDITIONS, AND ELEVATIONS WITH ARCHITECTURAL DRAWINGS PRIOR TO START OF CONSTRUCTION. THE CONTRACTOR SHALL INFORM THE ARCHITECT IN WRITING OF ANY DISCREPANCIES OR OMISSIONS NOTED ON THE DRAWINGS. ANY SUCH DISCREPANCY, OMISSION, OR VARIATION NOT REPORTED BEFORE START OF CONSTRUCTION SHALL BE THE RESPONSIBILITY OF THE CONTRACTOR. WHERE DISCREPENCIES OCCUR IN THESE DRAWINGS, NOTES AND DETAILS ON DRAWINGS SHALL TAKE PRECEDENCE OVER GENERAL STUCTURAL NOTES AND TYPICAL DETAILS.

CONTRACTOR SHALL ESTABLISH AND VERIFY ALL OPENINGS AND INSERTS FOR ARCHITECTURAL, MECHANICAL, PLUMBING, AND ELECTRICAL WITH APPROPRIATE TRADES, DRAWINGS AND SUBCONTRACTORS PRIOR TO CONSTRUCTION.

STANDARDS

WHERE REFERENCE IS MADE TO VARIOUS TEST STANDARDS FOR MATERIALS, SUCH STANDARDS SHALL BE THE EDITION REFERENCED IN THE GOVERNING BUILDING CODE.

TYPICAL DETAILS AND NOTES

TYPICAL DETAILS AND NOTES SHALL APPLY, THOUGH NOT NECESSARILY INDICATED AT A SPECIFIC LOCATION ON PLANS. WHERE NO DETAILS ARE SHOWN, CONSTRUCTION SHALL CONFORM TO SIMILAR WORK ON THE PROJECT. DETAILS MAY SHOW ONLY ONE SIDE OF CONNECTION OR MAY OMIT INFORMATION FOR CLARITY.

SHOP DRAWINGS

SHOP DRAWINGS SHALL BE SUBMITTED FOR ALL STRUCTURAL ITEMS. SHOP DRAWINGS ARE REVIEWED ONLY FOR GENEREAL COMPLIANCE WITH THE STRUCTURAL DRAWINGS. REVIEW DOES NOT INDICATE THAT THE SHOP DRAWINGS ARE CORRECT OR COMPLETE. RESPONSIBILITY FOR CORRECTNESS SHALL REST WITH THE CONTRACTOR. ANY CHANGES, SUBSTITUTIONS, OR DEVIATIONS FROM CONTRACT DRAWINGS SHALL BE CLOUDED. ANY OF THE AFOREMENTIONED SHALL NOT BE CONSIDERED APPROVED AFTER ENGINEER'S REVIEW UNLESS SPECIFICALLY NOTED ACCORDINGLY. THE SHOP DRAWINGS DO NOT SUPERSEDE OR REPLACE THE ORIGINAL CONTRACT DRAWINGS. ANY ENGINEERING PROVIDED BY OTHERS AND SUBMITTED FOR REVIEW SHALL BEAR THE SEAL OF AN APPROPRIATELY REGISTERED ENGINEER. ENGINEERING SYSTEM SOLUTIONS SHALL NOT BE RESPONSIBLE FOR THE ADEQUACY OF ENGINEERING DESIGNS PERFORMED BY OTHERS. FIVE WORKING DAYS SHALL BE ALLOWED FOR THE ENGINEER'S REVIEW. CONTRACTOR SHALL PROVIDE A COPY OF EACH SUBMITTAL FOR ENGINEERING SYSTEM SOLUTIONS RECORDS.

SHOP DRAWINGS SHALL REFERENCE DATE AND DELTA (IF ANY) OF CONTRACT DRAWINGS.

MOLD

MOLD CONCERNS AND PREVENTION IS OUT OF ENGINEERING SYSTEM SOLUTIONS SCOPE OF SERVICES. ENGINEERING SYSTEM SOLUTIONS SHALL BE HELD HARMLESS, TO THE EXTENT OF THE LAW, FOR ALL MOLD PREVENTION AND MOLD RELATED CONCERNS.

BASIS FOR DESIGN

GOVERNING BUILDING CODE	2012 IBC (W/ SOUTHERN NEVADA AMENDMENTS) 2008 AASHTO STANDARD SPECIFICATIONS
DEAD LOAD	
STRUCTURE SELF-WEIGHT CONCRETE	150 PCF
VARYING COVER WITH A SOIL BACKFULL DENSITY	135 PCF
SOILS	
SOIL BEARING PRESSURE (D+L)	2000 PSF
SOIL BEARING PRESSURE (+W OR +E)	2660 PSF
MINIMUM FOOTING EMBEDMENT DEPTH	12 INCHES
AT REST EARTH PRESSURE - LEVEL BACKFILL	65 PCF
PASSIVE EARTH PRESSURE	300 PCF
COEFFICIENT OF FRICTION FOR LATERAL SLIDING RESISTANCE	0.40
SEISMIC	
SITE CLASS	D
SDS	0.344
*SEISMIC NOT REQ'D ON BURIED STRUCTURES PER AASHTO SECTION 3.10	

CONCRETE

MATERIAL

MINIMUM 28 DAY COMPRESSIVE STRENGTH FOR SLAB ON GRADE, FOOTING, AND WALLS IS 4500 PSI. (DESIGNED FOR 4000 PSI)

CEMENT SHALL BE TYPE V.

MAXIMUM W/C RATIO SHALL BE 0.45.

CONCRETE SLUMP SHALL BE 4-6 INCHES.

ALL CONCRETE SHALL BE NORMAL WEIGHT OF 145 POUND PER CUBIC FOOT UNLESS NOTED OTHERWISE, USING HARD ROCK AGGREGATES CONFORMING TO ASTM C33.

BATCHING, MIXING, AND TRANSPORTING

BATCHING, MIXING, AND TRANSPORTING CONCRETE SHALL BE PER ACI 301.

CONCRETE MIXES SHALL BE DESIGNED BY A CERTIFIED LABORATORY AND APPROVED BY THE ENGINEER OF RECORD.

CONCRETE

PORTLAND CEMENT SHALL CONFORM TO ACI 301.

WATER SHALL NOT BE ADDED AT THE JOB SITE SUCH THAT THE APPROVED MIX DESIGN W/C RATIO IS EXCEEDED.

FORM WORK

FORM WORK SHALL BE PER ACI 301.

PLACING

PLACING OF CONCRETE SHALL BE PER ACI 301.

PLACING OF CONCRETE BY MEANS OF PUMPING SHALL BE PER ACI 301.

WHERE THERE IS A RISK OF PREMATURE DRYING, SUCH AS IN HOT OR WINDY WEATHER, CURING MEASURES SHALL BE IMPLEMENTED PER THE RECOMMENDATIONS OF ACI 301.

CONSOLIDATION

CONSOLIDATION OF CONCRETE SHALL BE PER ACI 301.

EMBEDDED ITEMS

EMBEDDED ITEMS SHALL BE PLACED PER ACI 301.

CONDUITS AND PIPES SHALL NOT BE EMBEDDED IN STRUCTURAL CONCRETE WITHOUT WRITTEN APPROVAL FROM THE ENGINEER OF RECORD.

EMBEDDED CONDUITS, PIPES, AND SLEEVES SHALL NOT BE LARGER IN DIAMETER THAN 1/3 THE OVERALL THICKNESS OF THE SLAB, BEAM, OR WALL IN WHICH THEY ARE EMBEDDED AND SHALL NOT BE SPACED CLOSER THAN 3 DIAMETERS OR ELEMENT WIDTHS ON CENTER.

NO ALUMINUM EMBEDS SHALL BE IN DIRECT CONTACT WITH CONCRETE.

COLD WEATHER CONCRETING

WHEN THE AIR TEMPERATURE IS BELOW 40°F, COLD WEATHER CONCRETE PROCEDURES SHALL BE USED PER ACI 301.

A CONSTRUCTION PLAN SHALL BE SUBMITTED TO THE ENGINEER DETAILING THE PROTECTION PROCEDURES PRIOR TO PLACEMENT OF CONCRETE.

HOT WEATHER CONCRETING

PRIOR TO CONCRETE PLACEMENT, TOP 3 INCHES OF SUB-BASE SHALL BE WETTED SUFFICIENTLY TO SATURATE SUB-BASE WITHOUT ANY STANDING WATER.

CONCRETE PLACEMENT TEMPERATURE MAY NOT EXCEED 90° FAHRENHEIT WHEN MEASURED IN ACCORDANCE WITH ASTM C1064.

STEEL FORMS AND REINFORCEMENT SHALL BE COOLED PRIOR TO CONCRETE PLACEMENT WHEN STEEL TEMBERATURES EXCEED 120° FAHRENHEIT.

MIX WATER, AGGREGATES, CONVEYING AND PLACING EQUIPMENT OR ANY COMBINATION OF THE ABOVE SHALL BE COOLED IF NECESSARY TO MAINTAIN PROPER CONCRETE PLACING TEMPERATURE.

SLAB ON GRADE

CONTRACTOR SHALL FOLLOW ACI 301 AGGREGATE SPECIFICATION INCLUDING #8 AND #4 AGGREGATES TO PROVIDE A WELL-GRADED AGGREGATE MIX.

CONTRACTOR SHALL PROVIDE CONTROL JOINTS. SEE TYPICAL CONTROL JOINT IN CONCRETE SLAB ON GRADE DETAIL.

FOUNDATION

DESIGN RECOMMENDATIONS

FIRM: GEOTECH RESIDENTIAL, LLC; REPORT NO.: 13566-LVR; DATE: AUGUST 7, 2017

CONSTRUCTION

ALL SITE PREPARATION, GRADING, COMPACTION TESTS, INSPECTIONS, ETC. SHALL BE FOLLOWED WITH STRICT ADHERENCE AND SHALL BE COMPLETED PRIOR TO ANY CONCRETE PLACEMENT. SEE ACI 325.3 FOR FURTHER REQUIREMENTS.

ENGINEERING SYSTEM SOLUTIONS ASSUMES NO LIABILITY FOR GROUNDWATER OR OTHER MEANS OF FLOODING.

FOOTING EMBEDMENT

ALL FOOTINGS SHALL EXTEND BELOW GRADE THE MINIMUM EMBEDMENT DEPTH AS NOTED ON THE FOUNDATION PLAN.

SLAB ON GRADE

SUPPORT PER THE GEOTECHNICAL RECOMMENDATIONS.

FOLLOW ACI 302.1 RECOMMENDATIONS FOR PLACING CONCRETE, CURING, AND QUALITY CONTROL.

BACKFILL

BACKFILL SHALL NOT BE PLACED AGAINST EXTERIOR WALLS UNTIL THE INTERIOR FLOOR SYSTEM CAN ADEQUATELY BRACE THE WALL.

BACKFILL AND RECOMPACT ALL TRENCHES PER THE GEOTECHNICAL REPORT. (MIN 90% DRY DENSITY)

DRAINAGE

PROVIDE ADEQUATE DRAINAGE AWAY FROM THE STRUCTURE.

DEFERRED SUBMITTALS

SPECIALTY ITEMS

PREFABRICATED OR SPECIALTY ITEMS AND THEIR COMPONENTS, WHICH ARE INDICATED BY THE STRUCTURAL DRAWINGS TO BE DESIGNED BY OTHERS, MAY BE SUBMITTED TO THE ARCHITECT AND/OR ENGINEER OF RECORD FOR REVIEW AS A DEFERRED SUBMITTAL PROVIDED THAT SUCH SUBMITTAL IS AUTHORIZED BY THE BUILDING DEPARTMENT. DEFERRED SUBMITTALS REQUIRED TO BE SUBMITTED TO THE STRUCTURAL ENGINEER OF RECORD SHALL INCLUDE BUT NOT BE LIMITED TO:

-CONCRETE MIX DESIGN

PREPARATION

ALL DEFERRED SUBMITTALS SHALL INCLUDE CALCULATIONS AND DRAWINGS PREPARED IN ACCORDANCE WITH ALL APPLICATION BUILDING CODES AND STAMPED BY AN APPROPRIATELY LICENSED PROFESSIONAL ENGINEER. SUBMITTALS SHALL SHOW LOCATION AND MAGNITUDE OF LOADS, SIZE AND CONFIGURATIONS OF MEMBERS, AND COMPATIBILITY WITH THE PRIMARY STRUCTURAL SYSTEM.

REVIEW

DEFERRED SUBMITTAL ITEMS SHALL BE REVIEWED IN ACCORDANCE WITH STANDARD SHOP DRAWING REVIEW PROCEDURES AS DESCRIBED IN THE GENERAL REQUIREMENTS SECTION OF THE GENERAL STRUCTURAL NOTES.

STRUCTURAL STEEL

GENERAL

DESIGN, FABRICATION, AND ERECTION OF STRUCTURAL AND MISCELLANEOUS STEEL SHALL CONFORM TO THE SPECIFICATIONS AND STANDARDS OF THE AMERICAN INSTITUTE OF STEEL CONSTRUCTION AS CONTAINED IN THE "AISC MANUAL OF STEEL CONSTRUCTION", CURRENT EDITION.

MEMBERS

STRUCTURAL STEEL MEMBERS SHALL CONFORM WITH THE ASTM STANDARDS AND MATERIAL PROPERTIES PER TYPICAL DETAIL "STEEL MEMBERS' ASTM STANDARDS AND PROPERTIES" UNLESS NOTED OTHERWISE.

FABRICATION

SHOP DRAWINGS SHALL SHOW MEMBER LAYOUT, SIZE, LENGTH, BOLT HOLE SIZES AND LOCATIONS, CONNECTION DETAILS, GRADE, AND ERECTION PROCEDURES CONFORMING TO AISC SPECIFICATIONS.

FABRICATORS SHALL BE PRE-QUALIFIED, APPROVED, AND RECOGNIZED BY THE BUILDING OFFICIAL AND CONTRACTOR AS COMPETENT TO COMPLETE REQUIRED FABRICATED ITEMS.

WELDING

WELDING PROCEDURES, ELECTRODES, AND WELDER QUALIFICATIONS SHALL CONFORM TO THE "CODE FOR WELDING IN BUILDING CONSTRUCTION", AMERICAN WELDING SOCIETY (AWS) AND THE AISC "SPECIFICATIONS FOR THE DESIGN, FABRICATION AND ERECTION OF STRUCTURAL STEEL BUILDINGS".

ALL WELDS SHALL USE A FILLER MATERIAL WITH A TENSILE STRENGTH OF 70 KSI.

ALL WELDS INVOLVING REINFORCING BARS SHALL FOLLOW AISC SPECIFICATIONS.

WELDING OR TACK WELDING OF HIGH STRENGTH BOLTS (ASTM A325 OR A490) IS NOT PERMITTED.

ALL EXPOSED BUTT WELDS SHALL BE GROUND SMOOTH.

FOR ALL WELDS REQUIRING CONTINUOUS INSPECTION, FABRICATOR OR ERECTOR SHALL SUBMIT A WELDING PROCEDURE TO THE ENGINEER.

BOLTING

ALL BOLTED CONNECTIONS SHALL BE SNUG-TIGHTENED AS DEFINED PER AISC UNLESS NOTED OTHERWISE IN DRAWINGS. SEE DRAWINGS FOR BOLTS THAT ARE REQUIRED TO BE PRE-TENSIONED OR SLIP CRITICAL AS DEFINED PER AISC. ALL BOLTS SHALL BE INSTALLED USING AN APPROVED AISC PROCEDURE.

GROUT

GROUT SHALL BE 5,000 PSI (MINIMUM) NON-SHRINK FLOWABLE GROUT AND INSTALLED BEFORE ADDING VERTICAL LOAD.

HOT DIP GALVANIZING

ALL STRUCTURAL STEEL SHALL BE HOT DIP GALVANIZED PER ASTM A123. FASTENERS SHALL BE HOT DIP GALVANIZED PER ASTM F2329.

ALL TOUCH-UP OF GALVANIZED ITEMS TO BE PER ASTM A780.

REINFORCING STEEL

REINFORCING BARS SHALL BE DEFORMED, EXCEPT AS NOTED IN ACI 301.

USE OF EPOXY-COATED BARS IS NOT PERMITTED.

GRADE

ALL WELDED BARS SHALL BE GRADE 60, REFER TO ASTM STANDARD A706.

#4 BARS OR LARGER SHALL BE GRADE 60, REFER TO ASTM STANDARD A615.

#3 BARS OR SMALLER SHALL BE GRADE 40, REFER TO ASTM STANDARD A615.

CLEAR COVER

ALL DIMENSIONS NOT NOTED AS "CLR" ARE TO THE CENTER OF THE BAR.

FOR CLEAR COVER REQUIREMENTS REFER TO TYPICAL DETAIL "MINIMUM COVER FOR NON-PRESTRESSED STEEL".

REINFORCEMENT SUPPORTS

REINFORCEMENT SUPPORT SHALL BE PROVIDED TO MAINTAIN CLEAR DIMENSIONS SHOWN ON PLANS AND SHALL CONFORM TO ONE OF THE FOLLOWING SUPPORT TYPES: WIRE, COATED WIRE, PRECAST CONCRETE, PLASTIC.

REINFORCEMENT SUPPORT SHALL COMPLY WITH ACI 301.

LAP SPLICING

UNLESS NOTED OTHERWISE TACK WELDING OF REINFORCING BARS NOT ALLOWED.

FOR LAP LENGTH REQUIREMENTS REFER TO TYPICAL DETAIL "LAP LENGTH SCHEDULE".

MECHANICAL SPLICE COUPLERS

MECHANICAL SPLICE COUPLERS SHALL HAVE CURRENT ICC-ES APPROVAL AND SHALL BE CAPABLE OF DEVELOPING 125% OF THE STRENGTH OF THE BAR.

WELDING

WELDING OF REINFORCING BARS, METAL INSERTS, AND CONNECTIONS SHALL CONFORM TO AWS D1.4. BENDING SHALL BE MADE ONLY AT LOCATIONS SHOWN ON PLANS OR DETAILS. ALL REINFORCING SHALL BE BENT COLD. BARS SHALL NOT BE UN-BENT AND RE-BENT.

BENDING

BENDING SHALL BE MADE ONLY AT LOCATIONS SHOWN ON PLANS OR DETAILS. ALL REINFORCING SHALL BE BENT COLD. BARS SHALL NOT BE UNBENT AND REBENT. #5 BAR AND SMALLER MAY BE COLD FIELD BENT. #6 BAR AND LARGER SHALL NOT BE FIELD BENT WITHOUT PRIOR APPROVAL FROM ENGINEER.

PLACE AND DETAIL

ALL BARS SHALL BE DETAILED AND PLACED PER CRSI SPECIFICATIONS AND HANDBOOK. DOWEL ALL VERTICAL REINFORCING TO FOUNDATION. SECURELY TIE ALL BARS IN LOCATION BEFORE PLACING CONCRETE.

SPECIAL INSPECTIONS

A SPECIAL INSPECTOR SHALL BE PROVIDED TO OBSERVE WORK FOR CONFORMANCE WITH THE CONTRACT DOCUMENTS. THE INSPECTOR SHALL SUBMIT A SIGNED STATEMENT TO THE OWNER, CONTRACTOR, AND ENGINEER INDICATING THE SPECIAL INSPECTION WORK WAS IN COMPLIANCE WITH THE PLANS AND SPECIFICATIONS.

SPECIAL INSPECTIONS SHALL BE PROVIDED FOR THE FOLLOWING WORK:

- BACKFILL
- REINFORCEMENT
- CONCRETE
- ADHESIVE ANCHORING

DESIGN CRITERIA:

A. DESIGN FOR 2012 IBC AND 2008 AASHTO STD SPECIFICATIONS
B. SOIL DENISTY= 135 PCF
C. AT REST SOIL PRESSURE= 65 PCF

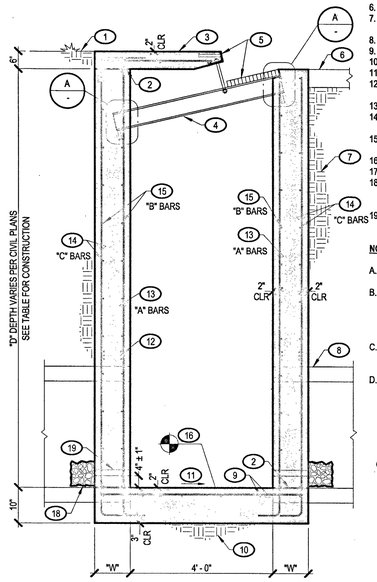

KEYNOTES:

1. T.O. FINISHED GRADE PER CIVIL
2. CONSTRUCTION JOINT ROUGHENED TO 1/4" AMPLITUDE
3. SIDEWALK SLAB AND REINF PER USDCCA DRAWING #412.1 FOR TYPE CM2
4. W8x16 AT 2'-6" O.C. W/ (2) 1/2"Ø x4" HSA EA END, BEAM TO EXTEND TO MID THICKNESS OF WALL EA END. REFER TO USDCCA DWG #412.1 FOR HSA PLACEMENT AND BEAM SLOPE.
5. CURB FACE ANGLE, HEADED STUD ANCHORS, GRATE, CONNECTIONS, AND HARDWARE PER USDCCA DRAWING #412.1 FOR TYPE CM2
6. CIVIL FLATWORK AS OCCURS
7. BACKFILL MATERIAL AND PROCEDURE PER GEOTECH REPORT
8. RCP PER PLAN AS OCCURS
9. #5 AT 12" O.C. EW TOP
10. PROPERLY PREPARED SUBGRADE
11. SLOPE AT INVERT TO DRAIN. VERIFY W/ CIVIL
12. ADDL BARS ABOVE RCP OPENING PER TYP REINF AT OPENING DETAIL
13. "A" BARS PER TABLE. PROVIDE STD HOOK T&B
14. SOIL FACE "C" BARS PER TABLE AS OCCURS W/ STD HOOK T&B
15. HORIZ "B" BARS PER TABLE W/ STD HOOK EA END
16. INVERT ELEVATION PER CIVIL
17. 1/4" END PLATE
18. (2) CUBIC FT OF FREE DRAIN MATERIAL WRAPPED IN FILTER FABRIC AT EA WEEP HOLE
19. 2" Ø WEEP HOLE EA SIDE OF STRUCTURE, LOCATE PER PLAN

NOTES:

A. END WALL CONSTRUCTION SHALL MATCH WALL CONSTRUCTION SHOWN
B. ALL EXPOSED STEEL SHALL BE HOT-DIPPED GALV. ANY GALVANIZING DAMAGED DURING CONSTRUCTION SHALL BE PAINTED W/ (2) COATS OF ALUMINUM PAINT (GALVANOX OR APPROVED EQ)
C. * DIMS SHOWN ARE BASED UPON THE CIVIL DWGS. CONTRACTOR TO VERIFY PRIOR TO CONSTRUCTION
D. ACTUAL DEPTH OF DROP INLET TO BE VERIFIED W/ CIVIL PLANS PRIOR TO CONSTRUCTION

NOTES:

A. VALUES IN TABLE ARE IN INCHES. LENGTHS BASED ON 60 GRADE REINF (NOT COATED) WITH CLASS B LAP SPLICES
B. TOP REINF IS DEFINED AS HORIZ REINF W/ MORE THAN 12" OF CONC BELOW
C. CONC STRENGTH SELECTED IN TABLE SHALL NOT EXCEED DESIGN CONC STRENGTH

REBAR LAP LENGTH SCHEDULE NORMAL-WEIGHT CONCRETE (145 PCF)

BAR	MIN CLR COVER	MIN BAR SPACING	f'c = 4000 PSI TOP *	f'c = 4000 PSI OTHER
#3	1.5	4.5	16	12
#4	1.5	4.0	20	16
#5	1.5	3.8	26	20
#6	2.0	3.0	38	28
#7	2.0	3.5	54	42
#8	2.0	3.0	82	62
#9	2.0	3.4	92	70
#10	2.0	3.8	102	80
#11	2.0	4.2	114	88

1 / S1 CONCRETE REBAR LAP SCHEDULE
TDC001

MODIFIED TYPE CM-2 WALL TABLE

D (MAX)	"W"	"A" BARS	"B" BARS	"C" BARS - SOIL FACE
10' - 0" AND LESS	SEE CCAUSD DWG NO. 412.1			
12' - 0"	10"	#5 VERTS AT 7" O.C.	#4 HORIZ AT 10" O.C.	NONE
14' - 0"	10"	#5 VERTS AT 4" O.C.	#4 HORIZ AT 10" O.C.	NONE
16' - 0"	12"	#5 VERTS AT 4" O.C.	#4 HORIZ AT 16" O.C.	#4 VERTS AT 16" O.C. #4 HORIZ AT 16" O.C.
18' - 0"	14"	#6 VERTS AT 5" O.C.	#5 HORIZ AT 18" O.C.	#5 VERTS AT 18" O.C. #5 HORIZ AT 18" O.C.

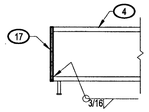

A / - END PLATE

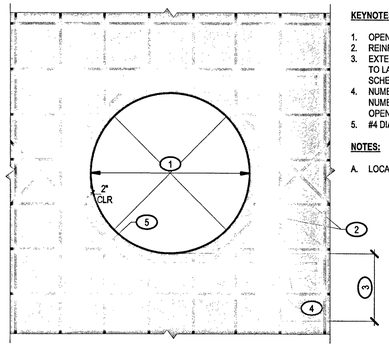

KEYNOTES:

1. OPENING DIA 4'-0" MAX UNO
2. REINF PER PLAN
3. EXTEND BARS PAST EDGE OF OPENING EQ TO LAP LENGTH OF BAR UNO, SEE LAP SCHED
4. NUMBER OF ADDED BARS EQ TO THE NUMBER OF BARS INTERRUPTED BY OPENING
5. #4 DIAG BARS AROUND OPENING AS SHOWN

NOTES:

A. LOCATION AS SHOWN PER CIVIL

3 / S1 SECTION AT DROP INLET
DI02R

2 / S1 TYPICAL REINFORCING AT OPENING
TCV109

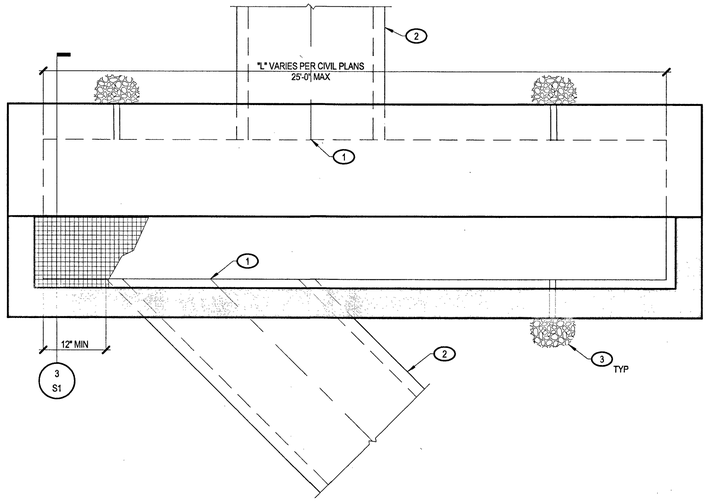

PLAN VIEW AT DROP INLET — SCALE: 1/2" = 1'-0"

KEYNOTES:

1. END OF RCP TO TERMINATE FLUSH WITH INSIDE FACE OF DROP INLET WALL. REINF AROUND RCP OPENING PER TYP REINF AT OPENING DETAIL. HOOK HORIZ AND VERT BARS INTO TOP OR BOT SLABS AS REQ'D
2. 48"Ø MAX RCP PER CIVIL, AS OCCURS. ACTUAL SIZE AND ORIENTATION OF RCP MAY VARY FROM THAT SHOWN. VERIFY PRIOR TO CONSTRUCTION
3. WEEPHOLE, ROCK POCKET, AND FILTER FABRIC PER SECTION AT DROP INLET DETAIL. LOCATE AS SHOWN, OR 8'-0" O.C. MAX

NOTES:

A. DROP INLET SSDI #1 AT STA. 10+53.83 (SEE CIVIL SHEETS G-10 AND PP-11). DROP INLET SDDI #2 AT STA. 10+49.29 (SEE CIVIL SHEETS G-5 AND PP-12). VERIFY W/ CIVIL PLANS PRIOR TO CONSTRUCTION. EXACT STATION, LOCATION, AND PIPE LAYOUT PER CIVIL PLANS.
B. VERIFY RCP SIZE AND LOCATION W/ CIVIL PLANS PRIOR TO CONSTRUCTION. NUMBER OF RCPS, LOCATION, AND ORIENTATION MAY VARY FROM THAT SHOWN
C. DROP INLET LENGTH PER CIVIL PLANS MAY VARY FROM THAT SHOWN. VERIFY PRIOR TO CONSTRUCTION

SEAL: STATE OF NEVADA — GEORGE M. GUIDICE — Exp.6/30/19 — CIVIL/STRUCTURAL — No. 21647 — PROFESSIONAL ENGINEER — 05/30/2018

ENGINEERING SYSTEM SOLUTIONS
STRUCTURAL • MEP • BUILDING COMMISSIONING
www.es2eng.com
BUILDING RELATIONSHIPS EXCEEDING EXPECTATIONS
4943 NORTH 29TH EAST, STE. A, IDAHO FALLS, IDAHO 83401 PHONE: (208) 552-9874
3652 N RANCHO DRIVE, LAS VEGAS, NV 89130 PHONE: (702) 646-3107
1677 BUSKA ROAD STE. #101, ROSEVILLE, CA 95661 PHONE: (916) 789-2030

PROJECT: SUMMERLIN PARCEL D
SLATER HANIFEN GROUP
LAS VEGAS, NV

SHEET TITLE: GENERAL STRUCTURAL NOTES

REV	DESCRIPTION	DATE

DRAWN: PF | CHECKED: SG/GM

DATE: 05/29/2018
PROJECT NUMBER: 18.2616
SHEET NUMBER: S1

THESE DRAWINGS AND SPECIFICATIONS ARE THE PROPERTY OF ENGINEERING SYSTEM SOLUTIONS. REUSE OF THESE DRAWINGS AND SPECIFICATIONS WITHOUT WRITTEN CONSENT OF ENGINEERING SYSTEM SOLUTIONS IS PROHIBITED. ENGINEERING SYSTEM SOLUTIONS SHALL NOT BE HELD LIABLE FOR ANY MODIFICATIONS MADE TO THESE DRAWINGS WITHOUT WRITTEN CONSENT.