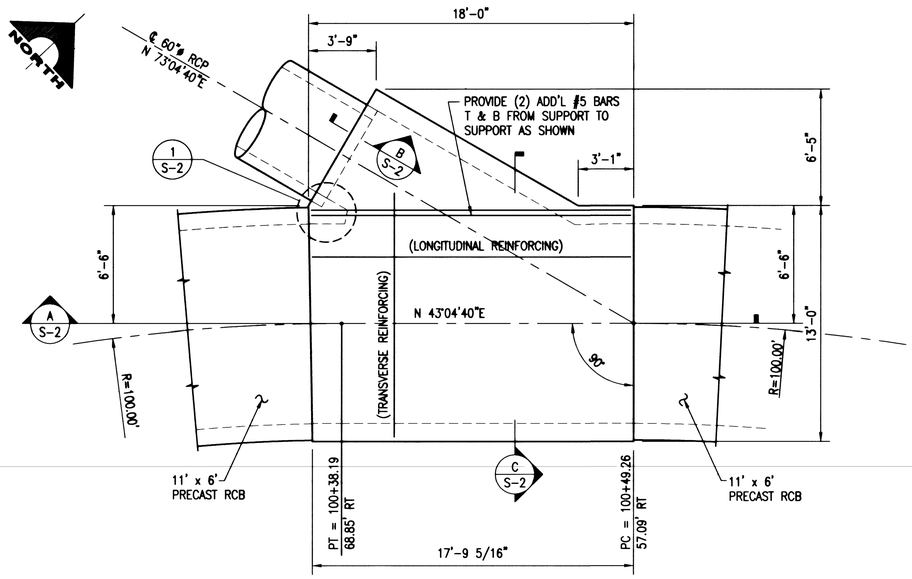

PLAN

1/4" = 1'-0"

1

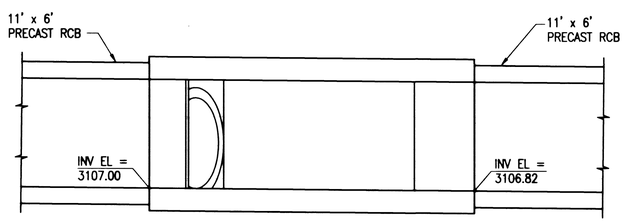

SECTION

1/4" = 1'-0"

A

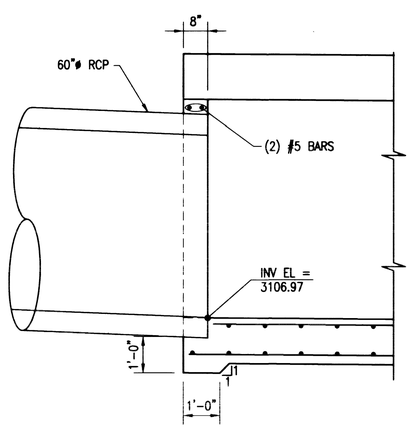

SECTION

1/2" = 1'-0"

B

SEE GENERAL NOTES ON S-1

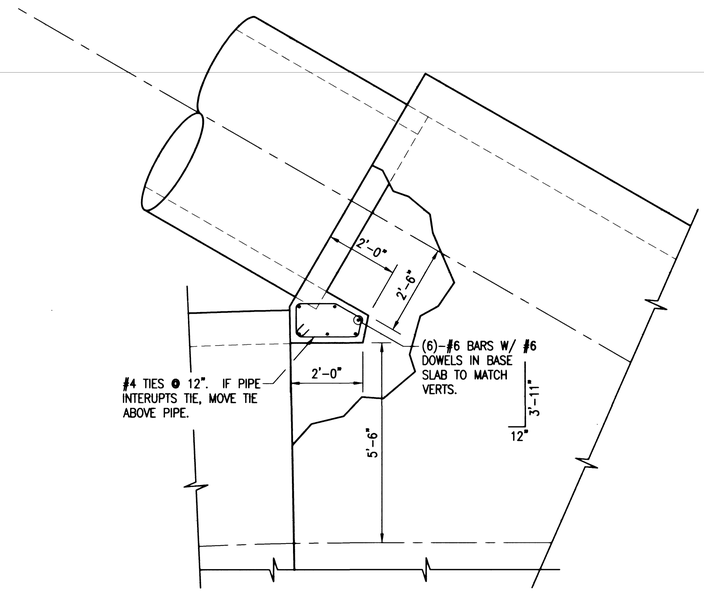

DETAIL

1/2" = 1'-0"

1

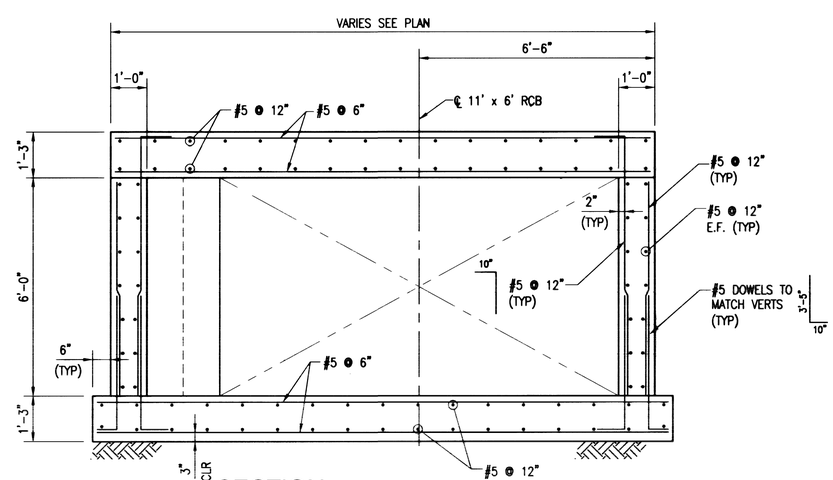

SECTION

1/2" = 1'-0"

C

ENGINEER-STATE OF NEVADA
G.C. RUSSELL DAVIS
PROFESSIONAL ENGINEER
STRUCTURAL
No. 8255
DATE: 3/6/02

REV	DATE	DESCRIPTION	DATE AGEN. APP	DATE GCW. APP

DESIGN: EGG
DRAWN: BRN
CHECK: PKH
ISSUE DATE:
ISSUE EDITOR:
PLOT DATE: 02-02-01
PLOT TIME: 15:13:30
eplies

G.C. WALLACE, INC.
Engineering/Architecture
1555 SOUTH RAINBOW BLVD./LAS VEGAS, NEVADA 89146
TEL: (702) 804-2000 FAX: (702) 804-2099 (702) 804-2299
F:\62020-2251\dwg\Improve\Structural\1RCBS002.dwg

SUMMERLIN
VILLAGE 20, UNIT 1 REGIONAL DRAINAGE IMPROVEMENTS
JUNCTION STRUCTURE

SHEET
S-2
18 OF 18 SHTS

JOB NO. 62020.2251

30760

731-73

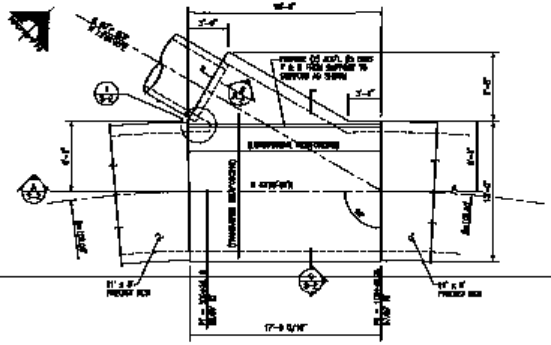

PLAN

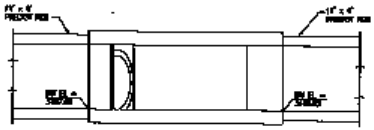

SECTION

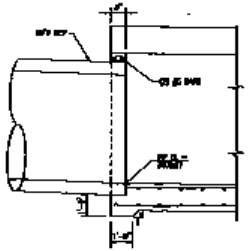

SECTION

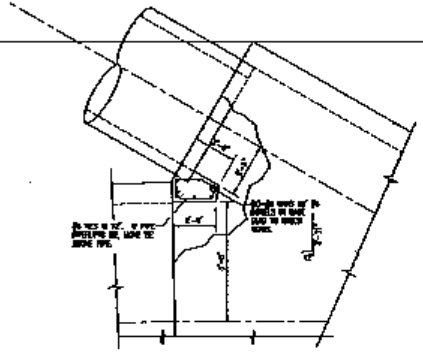

DETAIL

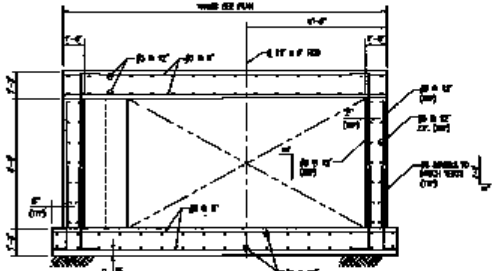

SECTION

G.C. WALLACE, INC.
Engineering/Architecture

GRANDPLAN
VILLAGE OF WEST FRANKFORT, CONTINUED IMPROVEMENTS
JUNCTION STRUCTURE

SHEET
G-2
15 OF 19 SHTS

30760

73J-73