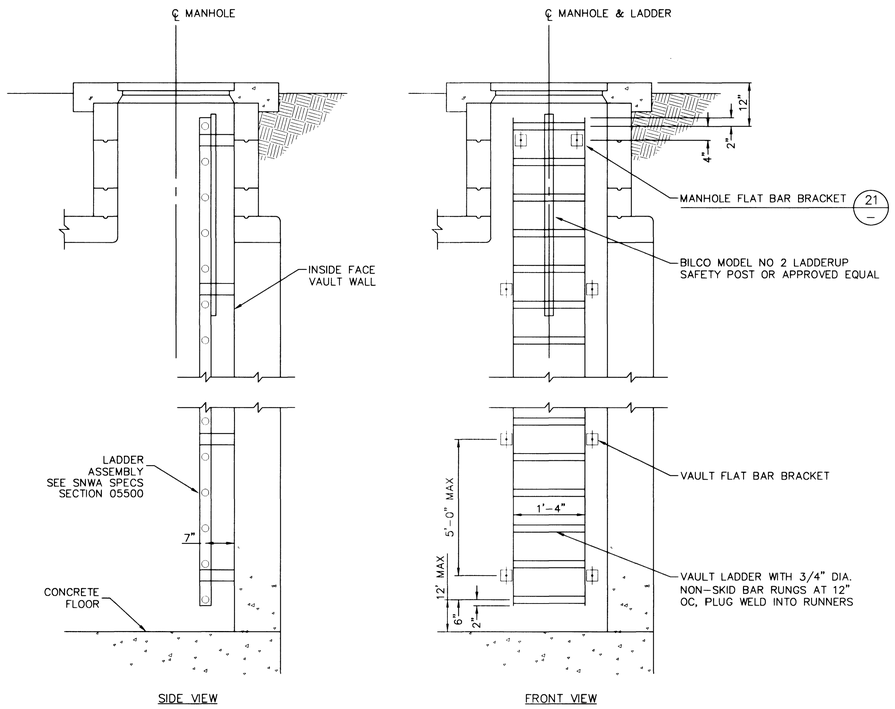

LADDER DETAIL 18
NOT TO SCALE

(W/ BAR HANDLES)

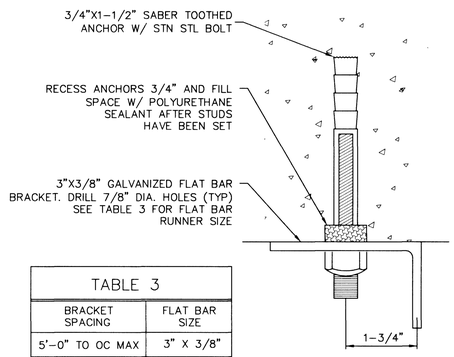

TABLE 3	
BRACKET SPACING	FLAT BAR SIZE
5'-0" TO OC MAX	3" X 3/8"
OVER 20'-0"	4" X 1/2"

BOLT DETAIL 19
NOT TO SCALE

Contractor shall field locate and protect all SNWA/SNWS appurtenances including, but not limited to AV/AR, access manways and cathodic protection systems. All above ground structures and at grade structures must be adjusted to new grade at contractor's expense. Cathodic protection test stations, rectifiers and AV/AR's must be relocated to the sidewalk per SNWA standards and at the contractor's expense. Contractor to NOTIFY SOUTHERN NEVADA WATER AUTHORITY, DEVELOPMENT PLAN REVIEW, at (702) 862-3444 at least 48 hours PRIOR to construction activity.

Sharon L. Kunemer 6/6/02
Southern Nevada Water Authority Date

SNWA approval is valid for one (1) year from the signature date. If construction within the easement or restricted pipe safety zone is not complete, plans must be resubmitted to SNWA for approval.

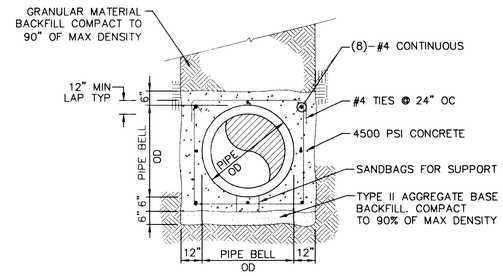

REINFORCED CONCRETE ENCASEMENT 20
NOT TO SCALE

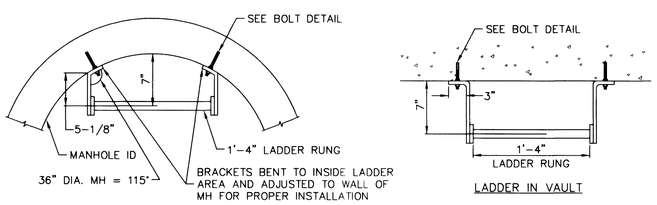

LADDER IN MANHOLE

LADDER IN VAULT

NOTE:

1. LANDING PLATFORM REQUIRED EVERY 20'-0" OF HEIGHT OR FRACTION THEREOF FOR OPEN LADDER. FOR LADDER WITH CAGE, PLATFORM SPACING IS 30'-0" MAX (OSHA 1910.27).
2. APPROVAL OF THE ENGINEER REQUIRED FOR ANY BRACKET SPACING OVER 5'-0" OC (SEE TABLE 3 FOR FLAT BAR SIZE, RE: DETAIL 19).
3. LADDER SHALL CONSIST OF 3/4 DIA. NON-SKID BAR RUNGS AT 12" OC, PLUG WELD INTO RUNNERS.
4. LADDER SHALL BE FABRICATED OF CARBON STEEL AND GALVANIZED AFTER FABRICATION.

FLAT BAR BRACKET DETAIL 21
NOT TO SCALE

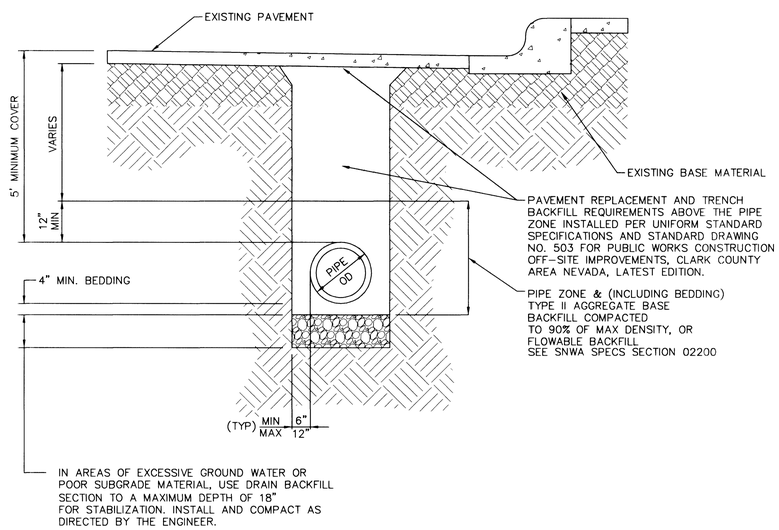

TRENCH BACKFILL – PAVED AREAS 22
NOT TO SCALE

SAFETY ALERT
Call Before You Overhead
1-702-593-6111

Avoid cutting underground utility lines. It's costly.
Call before you Dig
1-800-227-2600

DATE	REVISIONS

SCALE (H): NO SCALE | SCALE (V): NO SCALE | W.A. #
FLD. BK. # | DATE 5/31/02 | DESIGN BY JA

Kimley-Horn and Associates, Inc.
Engineering, Planning, and Environmental Consultants
© 2002

CITY OF LAS VEGAS NEVADA

DEPARTMENT OF PUBLIC WORKS

PROJECT: VEGAS DR./OWENS AVE. RANCHO DR. TO INTERSTATE 15

SHEET: WATERLINE RELOCATION DETAIL SHEET 4

PROFESSIONAL ENGINEER STATE OF NEVADA
BEN R. SPRAGUE
6-6-02
CIVIL
No. 8349
Exp: 12/31/02

DRAWING NO. UT-5 | 71/110

107-V3523

Kimley-Horn and Associates, Inc.
1000 East Hampton Road, Suite S-210
Las Vegas, NV 89123
PH 702-734-5666 FAX 702-734-5449

42708