STRUCTURAL NOTES:

GENERAL:

1. STRUCTURE DESIGNED IN ACCORDANCE WITH THE 1997 EDITION OF THE UNIFORM BUILDING CODE.
2. STRUCTURAL DESIGN SHALL CONFORM WITH ACI 318-99 EXCEPT AS OTHERWISE INDICATED BY ALL APPLICABLE LOCAL BUILDING CODES.
3. BACKFILL OPERATIONS WILL NOT BE ALLOWED UNTIL THE BASE SLAB, FOOTINGS, AND WALLS HAVE REACHED THEIR MINIMUM COMPRESSIVE STRENGTH AT 28 DAYS. CONTRACTOR SHALL BRACE ALL CONCRETE WALLS PRIOR TO PLACING AND COMPACTING BACKFILL.

DESIGN CRITERIA:

LIVE LOADS:
A. VEHICLE LOAD – 32,000 LBS
B. TRAFFIC LOAD – 250 PSF

DEAD LOADS:
A. SOIL – 120 PCF

FOUNDATIONS AND EARTHWORK:

1. ALL FOUNDATIONS, EARTHWORK, EXCAVATION, BACKFILL, AND SUBGRADE DRAINAGE SHALL BE SUBJECT TO OBSERVATION BY GEOTECHNICAL ENGINEER, DESIGNATED BY OWNER, WHOSE APPROVAL IS REQUIRED PRIOR TO PLACEMENT OF CONCRETE FOUNDATIONS. COORDINATE SCHEDULES TO FACILITATE OBSERVATION.

CONCRETE AND RELATED ITEMS:

1. CONCRETE WORK SHALL CONFORM TO ALL REQUIREMENTS OF ACI 301-96, STANDARD SPECIFICATIONS FOR STRUCTURAL CONCRETE, PUBLISHED BY THE AMERICAN CONCRETE INSTITUTE, DETROIT, MICHIGAN, EXCEPT AS MODIFIED BY THE REQUIREMENTS OF THESE CONTRACT DOCUMENTS.
2. ALL CONCRETE SHALL HAVE A MINIMUM COMPRESSIVE STRENGTH OF 4,000 PSI AT 28 DAYS, UNLESS OTHERWISE SPECIFIED. CEMENT SHALL BE TYPE 5.
3. ALL CONCRETE REINFORCING STEEL SHALL BE OF DOMESTIC MANUFACTURE AND SHALL CONFORM TO THE REQUIREMENTS OF ASTM A615, GRADE 60.
4. DETAILING OF CONCRETE REINFORCEMENT AND ACCESSORIES SHALL BE IN ACCORDANCE WITH ACI PUBLICATION 315.
5. ALL CONCRETE FOR STRUCTURES SHALL BE WATERTIGHT.
6. MINIMUM CONCRETE COVER FOR REINFORCEMENT SHALL CONFORM TO ACI 318-99 PART 7.7.1 "CAST-IN-PLACE CONCRETE" AND AS FOLLOWS:

   FOUNDATION AND ALL BELOW GRADE WALLS: 2" EXT. & 1-1/2" INT.
   SLABS: 3/4"
7. CONTRACTOR SHALL COORDINATE ALL PENETRATIONS, CONDUIT, CHAMFERS, AND EMBEDDED ITEMS PRIOR TO CONCRETE PLACEMENT AND/OR STEEL ERECTION. CONTRACTOR SHALL VERIFY ALL SIZES AND LOCATIONS.
8. DO NOT IMPOSE SERVICE LOADS (i.e. ROOF DEAD AND LIVE LOADS, FLOOR DEAD AND LIVE LOADS, BACKFILL, ETC.) UNTIL THE CONCRETE HAS REACHED ITS SPECIFIED MINIMUM COMPRESSIVE STRENGTH.
9. SUBMIT ORIGINAL SHOP DRAWINGS FOR FABRICATION, BENDING, AND PLACEMENT OF CONCRETE REINFORCEMENT. PROVIDE BAR SCHEDULES, STIRRUP SPACING, DIAGRAMS OF BENT BARS, AND ARRANGEMENT OF CONCRETE REINFORCEMENT. PROVIDE ADDITIONAL REINFORCEMENT FOR OPENINGS IN CONCRETE WALLS AND SLABS PER DETAILS.
10. WELDING OF REINFORCING BARS SHALL NOT BE PERMITTED, UNLESS APPROVED BY ENGINEER.

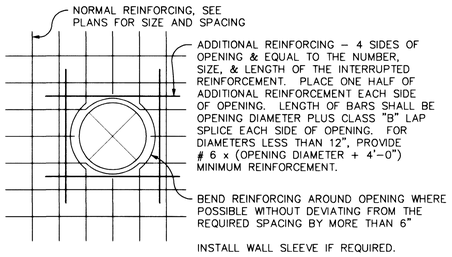

CIRCULAR WALL/SLAB OPENING STANDARD DETAIL (1)
NOT TO SCALE

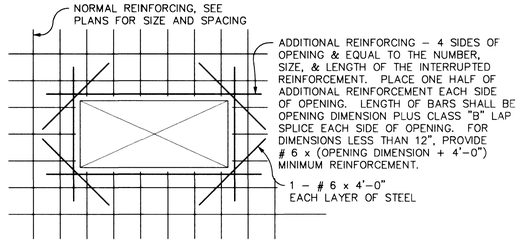

RECTANGULAR SLAB/WALL OPENING STANDARD DETAIL (2)
NOT TO SCALE

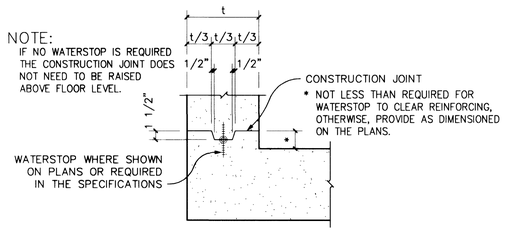

SHEAR KEY STANDARD DETAIL (3)
NOT TO SCALE

Contractor shall field locate and protect all SNWA/SNWS appurtenances including, but not limited to AV/AR, access manways and cathodic protection systems. All above ground structures and at grade structures must be adjusted to new grade at contractor's expense. Cathodic protection test stations, rectifiers and AV/AR's must be relocated to the sidewalk per SNWA standards and at the contractor's expense. Contractor to NOTIFY SOUTHERN NEVADA WATER AUTHORITY, DEVELOPMENT PLAN REVIEW, at (702) 862-3444 at least 48 hours PRIOR to construction activity.

Sharon L. Kunnemer — 6/6/02
Southern Nevada Water Authority — Date

SNWA approval is valid for one (1) year from the signature date. If construction within the easement or restricted pipe safety zone is not complete, plans must be resubmitted to SNWA for approval.

REINF. NOTES

RE: STRUCTURAL NOTES FOR ADDITIONAL REINFORCING AT OPENINGS.

THE VALVE VAULT SHALL BE IN ACCORDANCE WITH THE FOLLOWING SNWA SPECIFICATION SECTIONS:

SECTION 03200 – REINFORCING STEEL
SECTION 03300 – CAST IN PLACE CONCRETE
SECTION 03400 – PRECAST CONCRETE

WARNING: DRAIN VALVE VAULT IS A CONFINED SPACE. ALL OSHA SAFETY REQUIREMENTS FOR CONFINED SPACE ENTRY SHALL BE FOLLOWED.

WARNING: DRAIN VALVE VAULT IS A CONFINED SPACE. ALL OSHA SAFETY REQUIREMENTS FOR CONFINED SPACE ENTRY SHALL BE FOLLOWED.

THE STEEL PIPE SHALL BE MANUFACTURED, DELIVERED, AND INSTALLED IN ACCORDANCE TO SNWA SPECIFICATIONS SECTION 02570 "STEEL PIPE" AND SECTION 02572 "STEEL PIPE FABRICATED SPECIALS."

IN ADDITION TO SNWA SPECIFICATION SECTION 02570 "STEEL PIPE", THE FOLLWING SHALL TAKE PRESEDENCE:

THE STEEL PIPE SHALL BE ASTM 570 OR 572, GRADE 50 OR HIGHER

THE STEEL PIPE JOINTS SHALL BE A DOUBLE WELDED, FULLY CIRCUMFERENTIAL LAP JOINT.

THE 8", 24" & 36" STEEL PIPE SHALL HAVE A MINIMUM THICKNESS OF 3/8-INCH

PIPE SHALL BE MANUFACTURED WITH A CEMENT MORTAR COATING (EXTERIOR) AND CEMENT MORTAR LINING (INTERIOR).

8" PIPE SHALL BE AWWA C110 CLASS 250 DUCTILE IRON PIPE

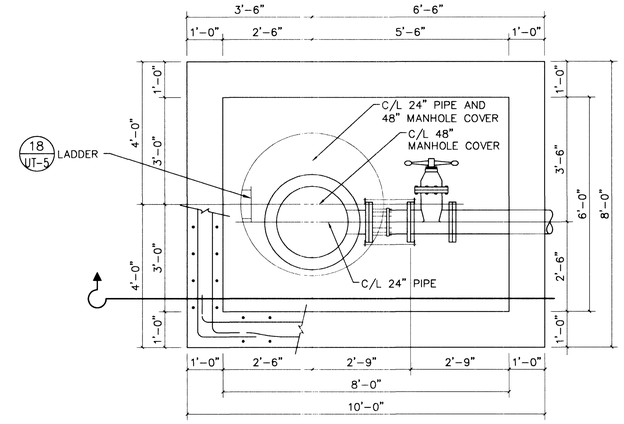

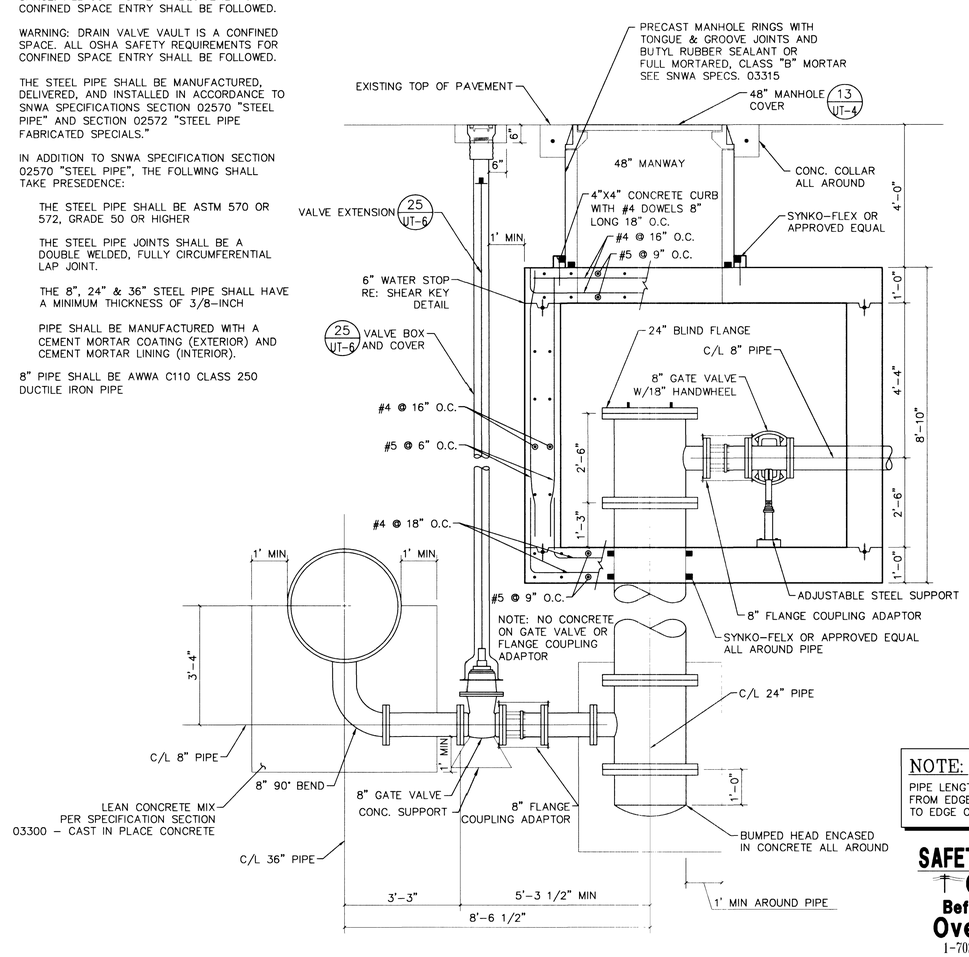

10' X 8' DRAIN VALVE VAULT ASSEMBLY (4)
SCALE: 1/2" = 1'

NOTE:
PIPE LENGTH IS MEASURED FROM EDGE OF JUNCTION TO EDGE OF JUNCTION.

SAFETY ALERT
Call Before You Overhead
1-702-593-6111
Avoid cutting underground utility lines. It's costly.

Call before you Dig
1-800-227-2600

REVISIONS | DATE

W.A. # | SCALE (V): NO SCALE | DESIGN BY: JA | DATE: 5/31/02 | SCALE (H): NO SCALE | F.D. BK. #

Kimley-Horn and Associates, Inc.
Engineering, Planning, and Environmental Consultants
© 2002

CITY OF LAS VEGAS NEVADA

DEPARTMENT OF PUBLIC WORKS

PROJECT: VEGAS DR./OWENS AVE. RANCHO DR. TO INTERSTATE 15

SHEET: WATERLINE RELOCATION DETAIL SHEET 1

PROFESSIONAL ENGINEER – STATE OF NEVADA
BEN W. SPRAGUE
6-6-02
CIVIL
No. 8349
Exp: 6/30/02

DRAWING NO. UT-2 | 68 / 110

107-V3523

Kimley-Horn and Associates, Inc.
10845 Griffith Peak Drive, Suite 210
Las Vegas, NV 89135
Tel: 702-735-6000 Fax: 702-735-4698

42705