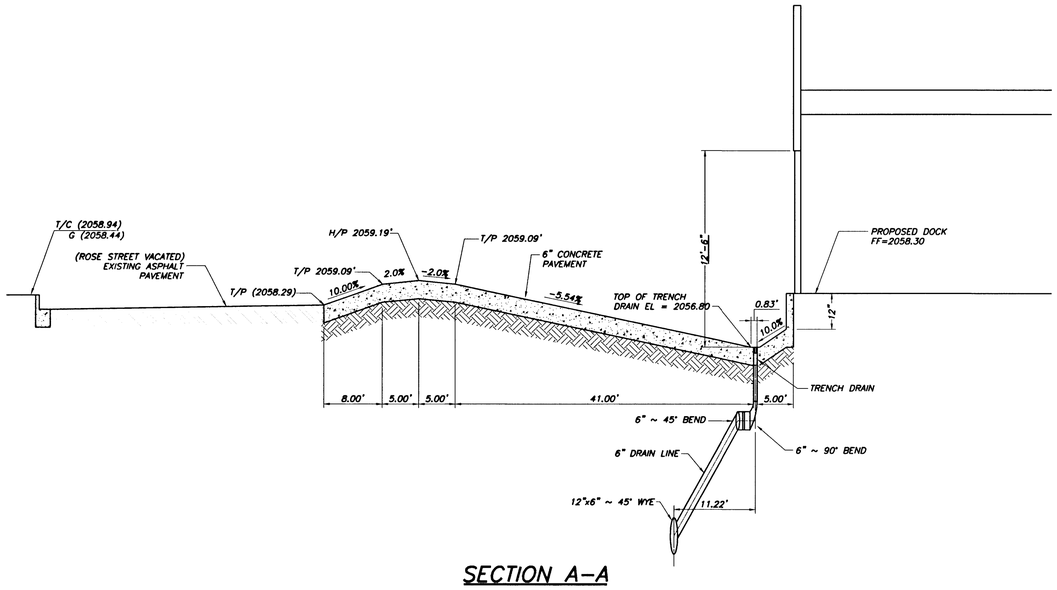

SECTION A-A
(N.T.S.)

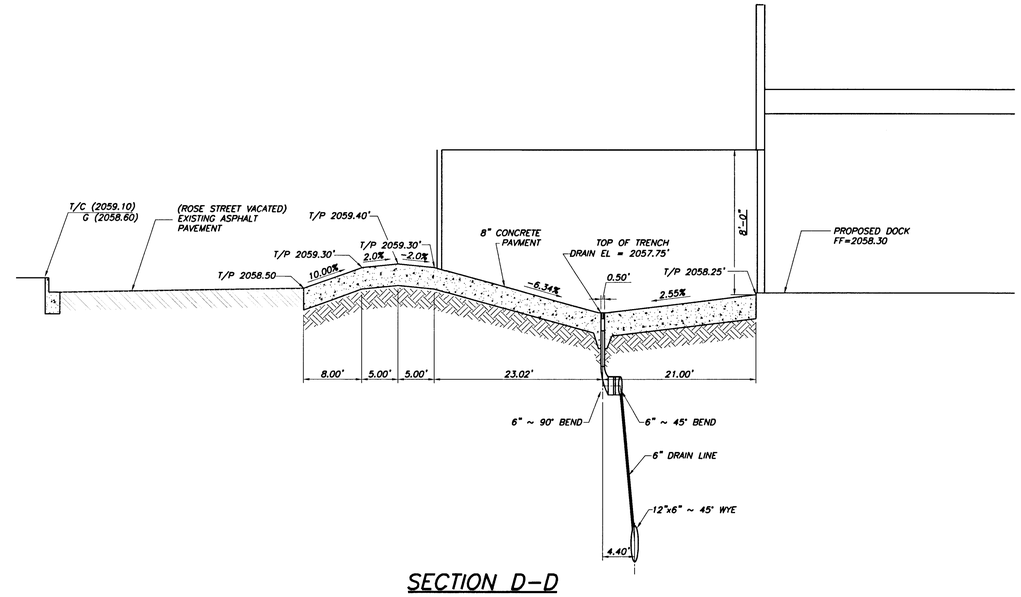

SECTION D-D
(N.T.S.)

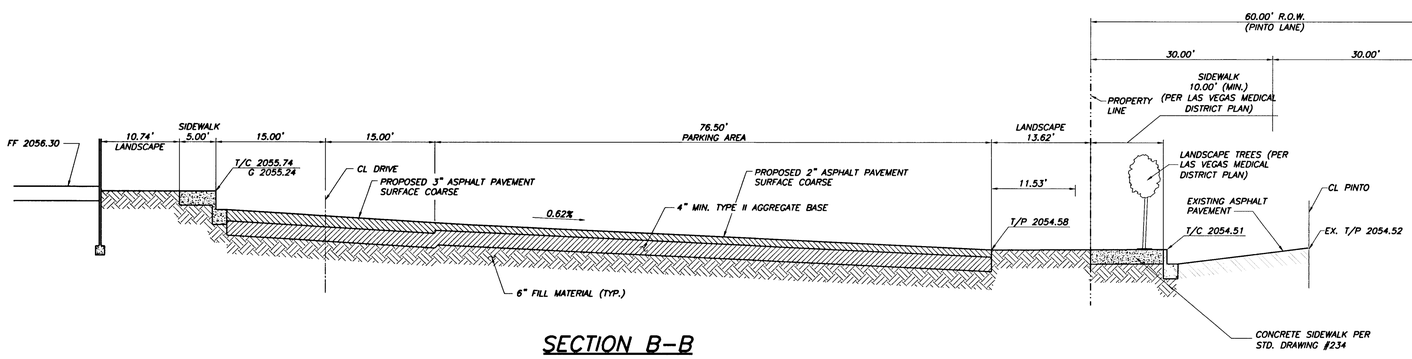

SECTION B-B
(N.T.S.)

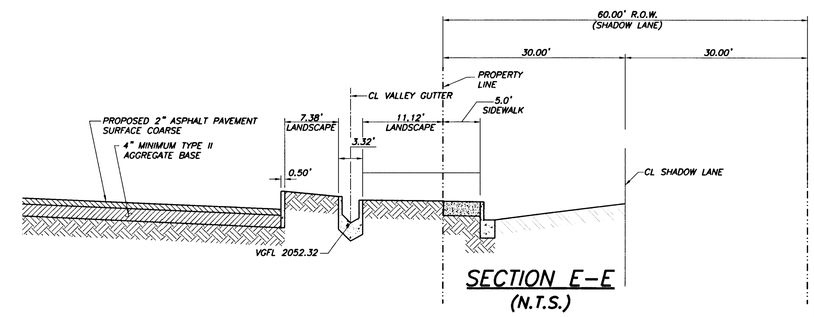

SECTION E-E
(N.T.S.)

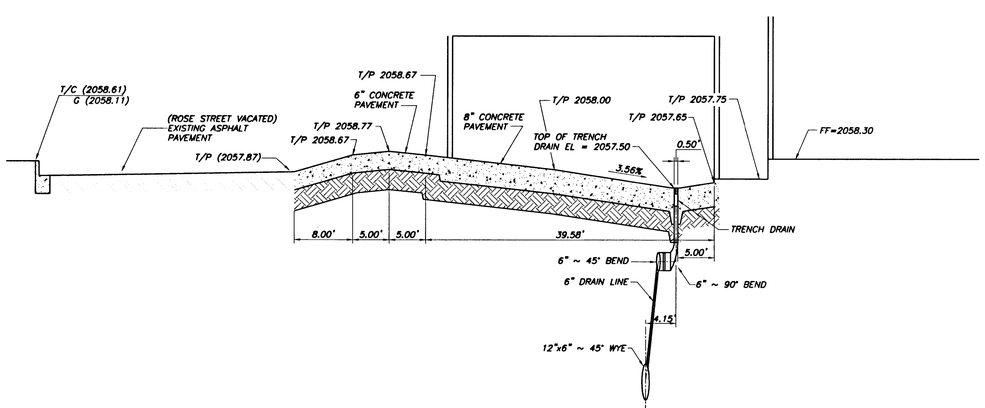

SECTION C-C
(N.T.S.)

Half plan and section of required tree grate

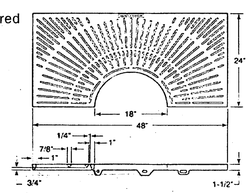

TREE GRATE DETAIL
(N.T.S.)

NOTES:
TREE GRATES SHALL BE PROVIDED FOR EVERY STREET TREE LOCATED IN A PUBLIC SIDEWALK. THE TREE GRATES SHALL BE FOUR-FOOT (4') SQUARE AND A.D.A. COMPLIANT. THE REQUIRED DESIGN SHALL BE MODEL NUMBER R-8706-1A 180 DEGREE SQUARE AS PROVIDED BY THE NEENAH FOUNDRY OR ITS EQUIVALENT.

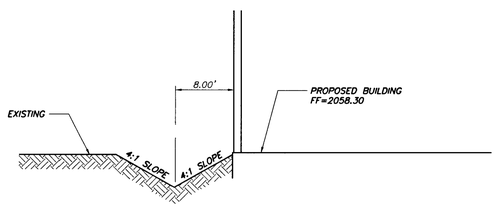

SECTION F-F
(N.T.S.)

Avoid cutting underground utility lines. It's costly.
Call before you Dig
1-800-227-2600

Avoid overhead power line contact. It's costly.
Call before you OVERHEAD
1-702-227-2929

BASIS OF BEARINGS:
NORTH 89°54'49" WEST, BEING THE BEARING OF THE CENTERLINE OF PINTO LANE, AS SHOWN ON THAT CERTAIN MAP ON FILE IN THE CLARK COUNTY RECORDER'S OFFICE IN BOOK 123, PAGE 37 OF PLATS, SITUATE IN THE SOUTHWEST QUARTER (SW 1/4) OF SECTION 33, TOWNSHIP 20 SOUTH, RANGE 61 EAST, M.D.M., CITY OF LAS VEGAS, CLARK COUNTY, NEVADA.

BENCHMARK:
CITY OF LAS VEGAS BENCHMARK 1LV01 33SW6
RIVET AND PLATE IN TOP OF CURB AT THE SOUTHEAST CORNER OR SHADOW LANE AND PALOMINO

ELEVATION = 626.313 METERS, 2054.83 FEET (NAVD 88)

REV:	DESCRIPTION:	DATE:	BY:

#2257

UHS

CLIENT
UHS OF DELAWARE, INC
367 SOUTH GULPH ROAD
KING OF PRUSSIA, PA 19406

ARCHITECT
HKS ARCHITECTS, INC.
1919 McKINNEY AVENUE
DALLAS, TX 75201

STRUCTURAL ENGINEER
HKS ARCHITECTS, INC.
1919 McKINNEY AVE.
DALLAS, TX 75201-1753

MEP ENGINEER
CCRD PARTNERS
3625 N. HALL ST., SUITE 1300 LB 139
DALLAS, TX 75219

DESIGN CONSULTANT
DESIGN STUDIO, INC.
161 LEVERINGTON AVENUE
PHILADELPHIA, PA 19127

CIVIL ENGINEER
LOPEZGARCIA GROUP
1825 MARKET CENTER, SUITE 500
DALLAS, TX 75207

LANDSCAPE ARCHITECT
JW ZUNINO AND ASSOCIATES
3191 S JONES BLVD
LAS VEGAS, NV 89146

HKS

Valley Hospital Medical Center

VALLEY HOSPITAL MEDICAL CENTER
LAS VEGAS, NEVADA

SURGERY EXPANSION

PROFESSIONAL ENGINEER - STATE OF NEVADA
RICHARD CARSON, JR
Exp: 12-31-08
CIVIL
No. 14870

DATE: 10/29/07

KEY PLAN
PLAN NORTH
TRUE NORTH

REVISION

HKS PROJECT NUMBER
07141.005

DATE
9 OCTOBER 2007

ISSUE
CONSTRUCTION DOCUMENTS

SHEET TITLE
PAVING SECTIONS

C2.10
SHEET NO.
7 OF 21

107N1092-EX

© 2007 HKS ARCHITECTS INC.

Drawing: P:\DM\206104.00_Valley_OR\Drawings\C2_10-Pavy_Sections.dwg at Oct 30, 2007-4:15pm by david.krucicik
Layout: Layout1 Xrefs: 06000.0043s.dwg - 01AFP-EX.dwg - 00ASP.dwg - civilbase.dwg - TB24X36.dwg

108106